**TOWN OF NEWTOWN, CONNECTICUT**

**INVITATION TO BID**

Sealed bids will be received at the office of the Financial Director, **3 Primrose Street**, Newtown, Connecticut 06470, until but no later than **1:00 pm, Monday, June 22, 2015**:

Cover: **DRAINAGE PROJECT - TAMARACK ROAD**

The Purchasing Authority of the Town of Newtown reserves the right to accept or reject any or all options, bids or proposals; to waive any technicality in any bid or part thereof, and to accept any bid deemed to be in the best interest of the Town of Newtown. The Town of Newtown is an Affirmative Action Employer-MBE/WBE are encouraged to bid. Specifications and bid documents may be obtained at www.newtown-ct.gov under the Purchasing Department.

E. Patricia Llodra
First Selectman

Robert G. Tait
Financial Director

**PURCHASING AUTHORITY**

**TOWN OF NEWTOWN PURCHASING AUTHORITY**
**INSTRUCTIONS TO BIDDERS**

1. Submit bids in a sealed envelope plainly marked to identify the particular bid. It is the sole responsibility of the bidder to see that the bid is in the hands of the proper authority prior to the bid opening time. Bidders may be present at the opening of the bids.

2. Withdrawals of, or amendments to bids received later than the time and date specified for bid opening will not be considered.

3. The Purchasing Authority of the Town of Newtown reserves the right to accept or reject any or all options, bids, or proposals; to waive any technicality in any bid, or part thereof, and to accept any bid deemed to be in the best interest of the Town of Newtown, Connecticut.

4. Bids may be held by the Town of Newtown for a period not to exceed sixty (60) days from the opening of the bids for the purpose of reviewing the bids and investigating the qualifications of bidders prior to the awarding of the contract.

5. Bids must be submitted on the "Sealed Bid Request" form enclosed at the end of this packet. All items must be filled in (unit cost, trade-in for each unit, etc.). Failure to comply with this requirement will automatically void the bid.

6. Trade-ins, when indicated, will be listed on the Sealed Bid Request form. The Town of Newtown reserves the right to trade all, some or none of the vehicles listed as deemed in the best interest of the Town. Bidders may submit a bid on the new vehicles with or without trade-ins or may submit bids on the trade-ins only, either individually or by lot. Trade-ins must be detailed individually as indicated on the Sealed Bid Request form. Trade-ins may be used in determining the lowest responsible bid.

7. The Town may consider proximity of the vendor's service as a factor in determining lowest price and reserves the right to award in whole or part to one or more vendors.

8. The Town agrees to pay for all equipment within thirty (30) working days after the equipment has been accepted and claim (invoice) presented.

9. Bid Security when required must be by a **certified check, letter of credit or surety bond** for five percent (5%) of the total bid, payable to the Town of Newtown. If a surety bond is enclosed, it shall be written on AIA Document A310, Bid Bond, unless otherwise provided in the Bidding Documents, and the attorney-in-fact who executes the bond on behalf of the surety shall affix to the bond a certified and current copy of the Power of Attorney.

10. The Town of Newtown reserves the right to retain the bid security of Bidders to whom an award is being considered until either: (a) the Contract has been executed and bonds, if required, have been furnished, or (b) the specified time has elapsed so that Bids may be withdrawn or (c) all bids have been rejected.

11. Prior to awarding any contract exceeding $25,000.00 for the construction, alteration, or repair for any public building or public work, a 100% performance bond and a labor or materialmen's bond must be furnished by the person to whom the contract is awarded.

12. Performance Bond when required must be by a **certified check, letter of credit or performance bond** for one hundred percent (100%) of the total bid. When submitting a performance bond, bonds must be written on AIA Document A312, Performance Bond and Payment Bond. Both bonds shall be written in the amount of the Contract Sum.

13. The successful bidder will be required to post a Certificate of Insurance, with the Town of Newtown named as additional insured, in an amount to be determined by the Town of Newtown.

**SPECIAL INSTRUCTIONS**
DRAINAGE IMPROVEMENT PROJECTS REV. 8/13

GENERAL SPECIFICATIONS
All construction shall be in accordance with the applicable sections of "The State of Connecticut Department of Transportation Standard Specifications for Roads, Bridges and Incidental Construction" also known as and herein referred to as "Form 816"or its successors, except as modified below, or in the specific project bid.

STARTING TIME
The Contractor is required to start work within fifteen (15) working days of receiving written confirmation of the bid award. The Contractor shall submit a certificate of insurance showing adequate coverage for workmen's compensation, bodily injury liability and property damage liability before any work begins.

PROJECT DURATION
The Contractor is required to work continuously on the project until its completion. Any interruptions in the work schedule must be approved by the Town. All work on the project must be completed by the completion date as specified. Any extension to this completion date must be done by Change Order and will be only granted at the Town's discretion. Reasons for time extensions could include weather, extraordinary site conditions etc.

Project Name: **Tamarack Road**
**Working Days to Complete: 10**
Completion Date will be specified upon notification of receipt of award letter

HOURS of WORK
The normal hours of work for this project shall be from 7:00 AM to 3:30 PM, Monday through Friday. No work shall be performed on weekends or official Town holidays. Any exception to the above must be approved in writing by the Town.

LIQUIDATED DAMAGES
In the event that the Contractor fails to complete the project within the required time there will be a fine in the amount of five hundred ($500.00) dollars per day for liquidated damages. These damages will be deducted from payment of monies owed to the Contractor.

TOWN SUPPLIED MATERIAL
1) All pipe, including collars and hardware
2) Precast concrete catch basins and manholes
3) Precast concrete tops for basins
4) Broken stone for underdrain
5) Processed Gravel (Road Mix)
6) Asphalt Concrete
7) Riprap
8) Topsoil and grass seed, baled hay for landscaping only (not erosion and sediment control)
9) Earth fill

The above items except for the asphalt will be stored at the Town of Newtown Highway Garage located at 4 Turkey Hill Road. It is the Contractors responsibility to transport all materials to the job site. **No material will be delivered by the Town or Town vendors.** The asphalt will be obtained from an approved plant designated by the Town. The Contractor is responsible to haul asphalt to the site. The Contractor is responsible to supply the Town with load tickets from the asphalt plant to verify tonnage. Any material damaged by the Contractor shall be replaced in kind by the Contractor.

CONTRACTOR SUPPLIED MATERIAL

The Contractor is responsible to supply the following item in order to complete the work. Cost for these items shall be included in other items in the project bid.

1) Mortar mix
2) Concrete block and brick
3) Reinforcing steel
4) Engineering/filter fabric
5) Asphalt tack coat
6) Siltation fence
7) Haybales and jute matting for erosion control
8) Class A concrete

GENERAL

The Contractor shall supply all equipment, labor, tools and incidental work necessary to complete the project as bid. The Contractor is responsible for field verifying all grades, locations and measurements shown on the plans. The Town Engineer shall be notified immediately of any discrepancies found.

While excavating, all waste material shall be loaded onto and removed by the Contractors trucks as the work progresses. No waste material shall be left on site. The Contractor is responsible to keep the construction area (including road surface) neat and clean. The cost of clearing and grubbing shall be included in the price bid for various items of construction unless a price for clearing and grubbing is requested in the bid.

The designated site for the disposal of excess excavated materials is the Newtown Highway Garage located at 4 Turkey Hill Road or other sites approved by the Town. Alternate sites, arranged by the Contractor may be permitted with the approval of the Town.

Restoration of disturbed areas: All disturbed areas shall be free of large rocks, stumps, brush or bruised trees or limbs. Areas shall be graded to restore or improve drainage patterns. Four (4)" of topsoil shall be spread and fine grade established with a rake. Grass seed and mulch shall be applied. Wood chips may be allowed in certain areas with permission from the Town. Gravel roads and drives shall have gravel replaced to a compacted depth of 12". The cost for restoration shall be included in other items bid in the contract unless a price is requested in the bid.

Adequate provisions for the passage of vehicular traffic normally using the roadway shall be made. Closing roads to thru traffic will be permitted only where adequate detours are available and only with prior approval of the Police and Fire Departments. Suitable access to all properties in the construction are shall be maintained at all times.

Requests for payment for additional work shall be made by Change Order only. The Change Order shall state the extent of the work and the amount of additional compensation requested. The Contractor shall not proceed with any extra work without written approval from the Town.

The Contractor is responsible for having all underground utilities marked and shall have a cleared starting date by CALL BEFORE YOU DIG.

The Contractor is responsible for supplying material, equipment and labor to install any sediment and erosion controls deemed necessary by the Town. Cost for this item shall be included in other items in the bid.

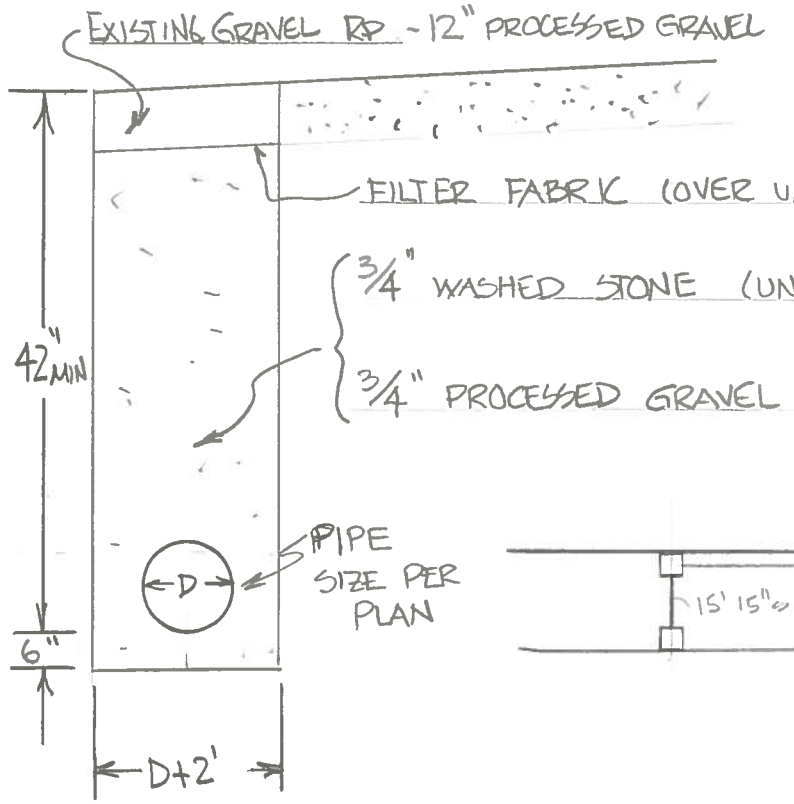


TYPICAL SECTION - STORM DRAIN
N.T.S

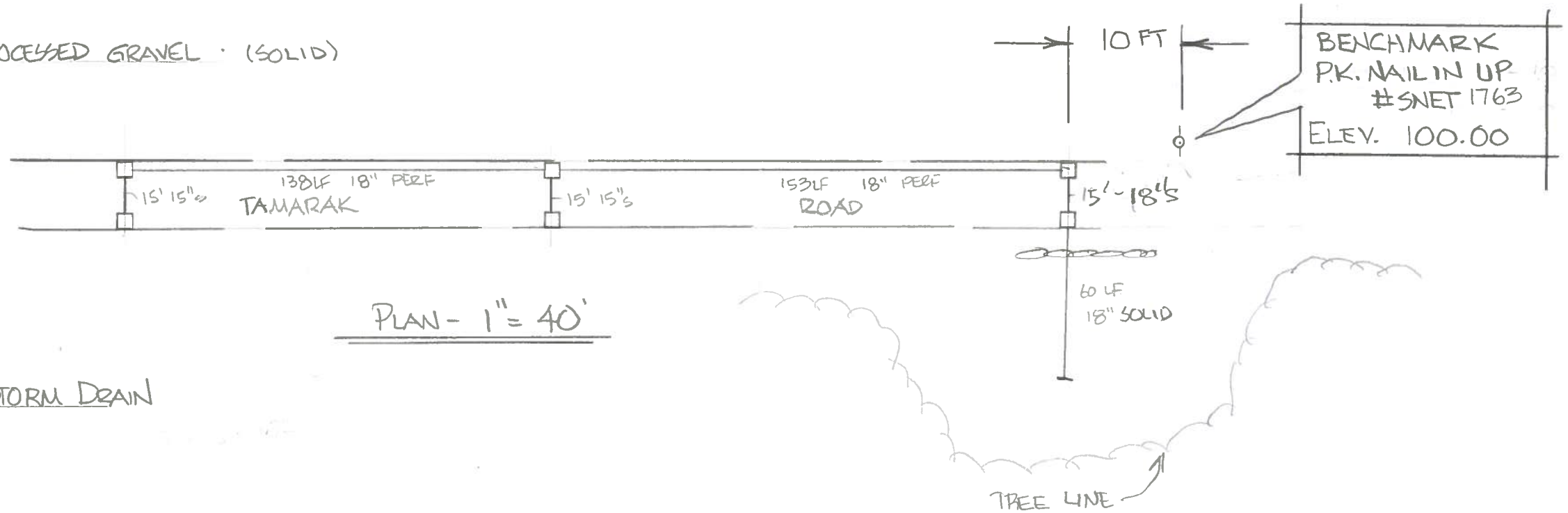


PLAN - 1" = 40'

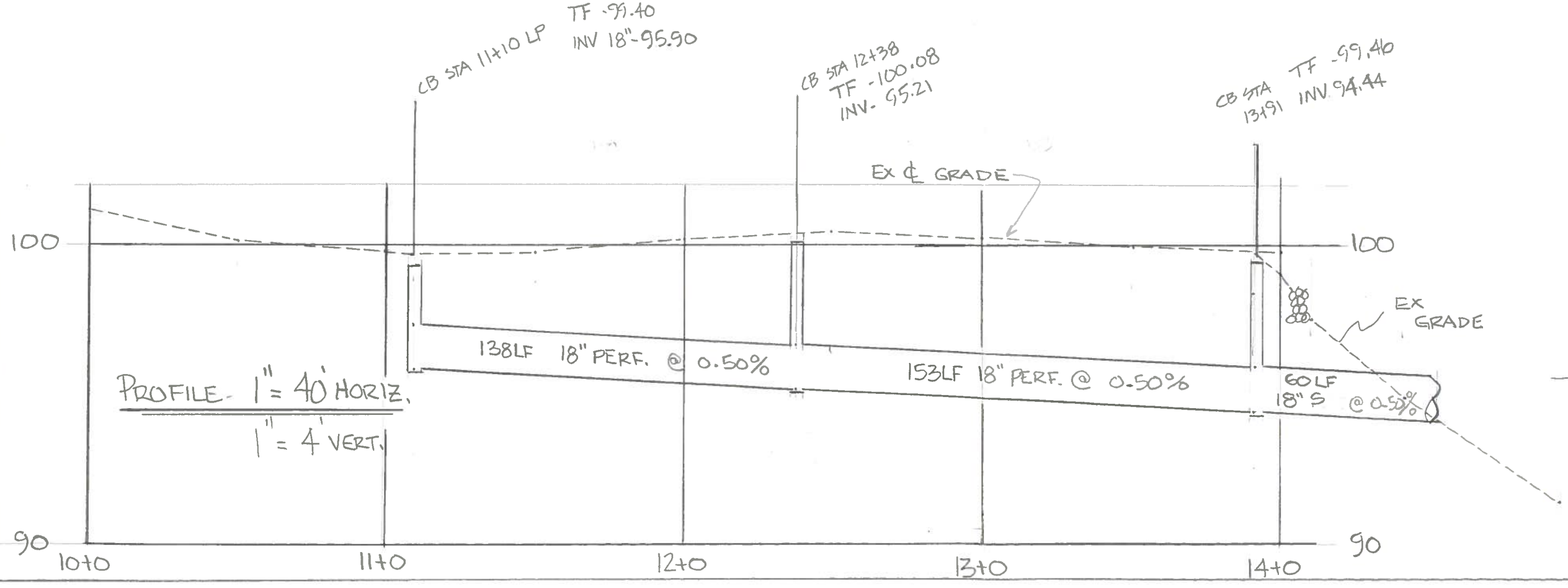


PROFILE - 1" = 40' HORIZ.
1" = 4' VERT.

DRAINAGE PLAN AND PROFILE

TAMARACK RD.
NEWTOWN, CT

OCTOBER 2014

## BASIS of PAYMENT

## PIPE INSTALLATION

**PIPE INSTALLATION.....Linear Foot**

**The price bid for this item shall include the following:**

1) Clearing and grubbing of all affected areas.

2) Cutting of pavement by method acceptable to the Town. All pavement cutting **must** be completed prior to excavating for the installation of the pipe.

3) Trench excavation to the limits as shown on the typical sections. All existing pipe and catch basins located within the limits of the trench excavation will be removed and disposed of. The cost for this removal is to be covered under this item.

4) Pipe shall be laid at proper elevation, line and grade.

5) Trench backfill with either broken stone or select backfill as indicated on the typical sections. All pipe backfill **must** be thoroughly compacted. All compaction equipment **must** be approved by the Town.

6) Preparation of subgrade and processed base course in areas to receive pavement.

7) Final restoration of unpaved areas. Restoration may include installation of filter fabric, and placement of topsoil, seed and mulch.

## BASIS of PAYMENT

## PRECAST CATCH BASINS WITH TOPS

**PRECAST CATCH BASIN WITH TOPS.....Each**

**The price bid for this item shall include the following:**

1) Clearing and grubbing of all affected areas.

2) Cutting of pavement by method acceptable to the town. All pavement cutting **must** be completed prior to excavating for the installation of the catchbasin.

3) All excavation and backfill of the unit. All backfill material **must** be thoroughly compacted. All compaction equipment **must** be approved by the Town. All existing catchbasins located within the excavation limits will be removed and disposed of. The cost for this removal is to be covered under this item.

4) Adjustments for proper grade and alignment.

5) All mortar and concrete block or brick necessary to obtain proper grade and alignment.

6) All finished mortaring for pipes and tops. All pipes shall be mortared on the outside as well as the inside of the catch basin.

7) All restoration of disturbed areas.

## BASIS of PAYMENT

## ROCK IN TRENCH EXCAVATION

**ROCK IN TRENCH EXCAVATION.....Cubic Yard**

**The price bid for this item shall include the following:**

1) Clearing and grubbing of all affected areas.

2) Removal of rock in trench to limits as shown in the typical sections for trench excavation.

3) Removal of rock from site.

4) It is the Contractors responsibility to provide all means of breaking rock. The contractor is responsible for obtaining all necessary permits if blasting is done.

Before any rock is to be removed, an agent of the Town of Newtown will field verify volume of rock to be removed.

## BASIS of PAYMENT

## MAINTENANCE and PROTECTION of TRAFFIC

**MAINTENANCE and PROTECTION of TRAFFIC.....Lump Sum**

**The price bid for this item shall include the following:**

1) All signs, cones, delineators, traffic control devices, etc., necessary to maintain the safe, orderly flow of traffic.

2) All safety pavement markings as necessary.

3) Certified flagmen.

All traffic control devices are to be in place prior to commencing any work.

# TAMARACK ROAD
## Drainage Project

| Item Description | Quantity | Unit Price | Total Cost |
|---|---|---|---|
| Pipe installation | | | |
| 1. 15" solid | 30 | _____/LF | _____ |
| 2. 18" underdrain | 291 | _____/LF | _____ |
| 3. 18" solid | 75 | _____/LF | _____ |
| Precast Catch Basin with Top | | | |
| 4. 3 ft. catch basin with type "C" top (0-6' high) | 6 | _____/EA | _____ |
| Rock in Trench | | | |
| 5. Rock in Trench | 10 (est.) | ____/CY | _____ |
| Maintenance and Protection of Traffic | | | |
| 6. Maintenance and Protection of Traffic | 1 | Lump Sum | _____ |

_____

Company Name

Note: Please include this price breakdown with the "Sealed Bid Request" form.

**TOWN OF NEWTOWN**

**SEALED BID REQUEST**

**BID OPENING DATE:** Monday, June 22, 2015 **TIME:** 1:00 pm

**LOCATION:** Finance Dept., Newtown Municipal Center, **3 Primrose Street**, Newtown, CT 06470

**BID TITLE: DRAINAGE PROJECT – TAMARACK ROAD**

**SECURITY REQUIRED:** Five Percent (5%) Bid Security. One Hundred percent (100%) Performance & Employees and Materialmen Security

**DATED IN NEWTOWN:** June 10, 2015

**BID SECURITY $**

(CERTIFIED CHECK, LETTER OF CREDIT OR BID BOND)

**PLEASE NOTE: ONE (1) ORIGINAL AND ONE (1) COPY OF SEALED BID and UNIT PRICING MUST BE SUBMITTED.**

**Is your company a MBE/WBE business:** _____ _____
**(YES) (NO**

TOTAL BID: $_____

**NOTE: Attach unit pricing sheet with this form.**

| | |
|---|---|
| **COMPANY** | **SIGNATURE** |
| **ADDRESS** | **SIGNED BY (Print or Type)** |
| **ADDRESS 2** | **TITLE** |
| **ADDRESS 3** | **FAX NO.** |
| **TELEPHONE NO.** | **DATE** |
| **TAX ID NUMBER** | **E-MAIL (Please include for our records)** |