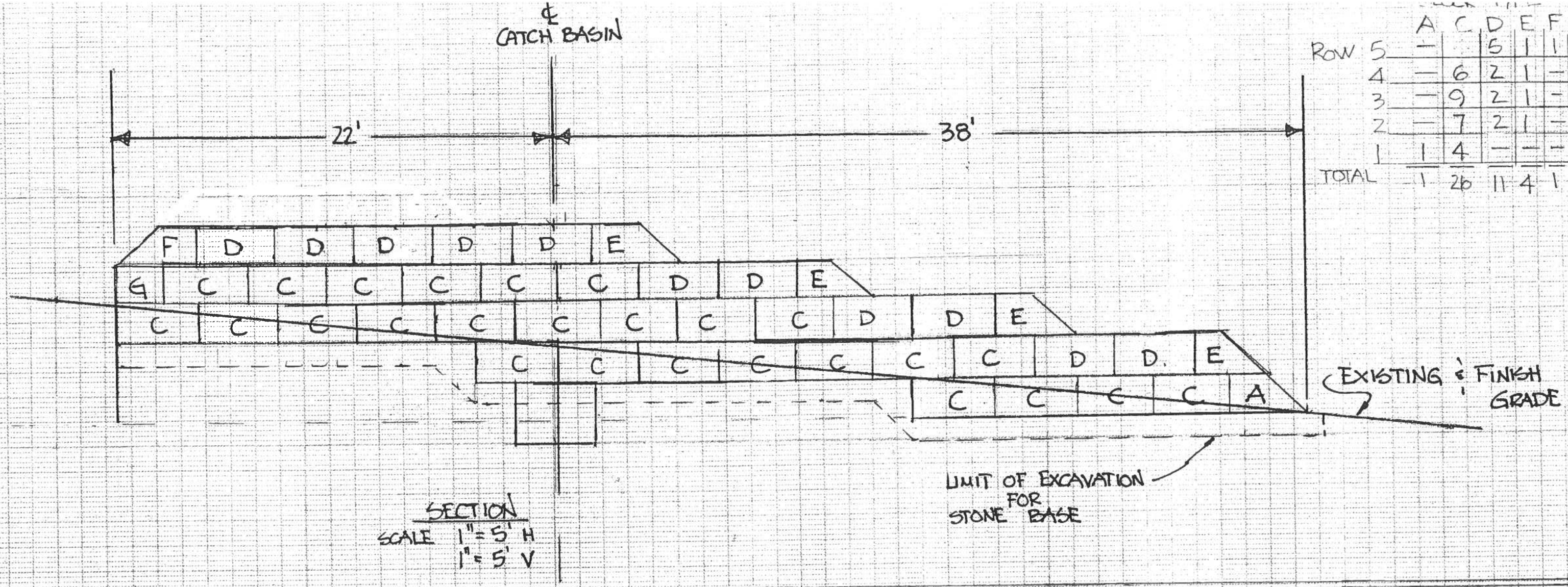

	A	C	D	E	F	G
ROW 5	—		5	1	1	—
4	—	6	2	1	—	1
3	—	9	2	1	—	—
2	—	7	2	1	—	—
1	1	4	—	—	—	—
TOTAL	1	26	11	4	1	1

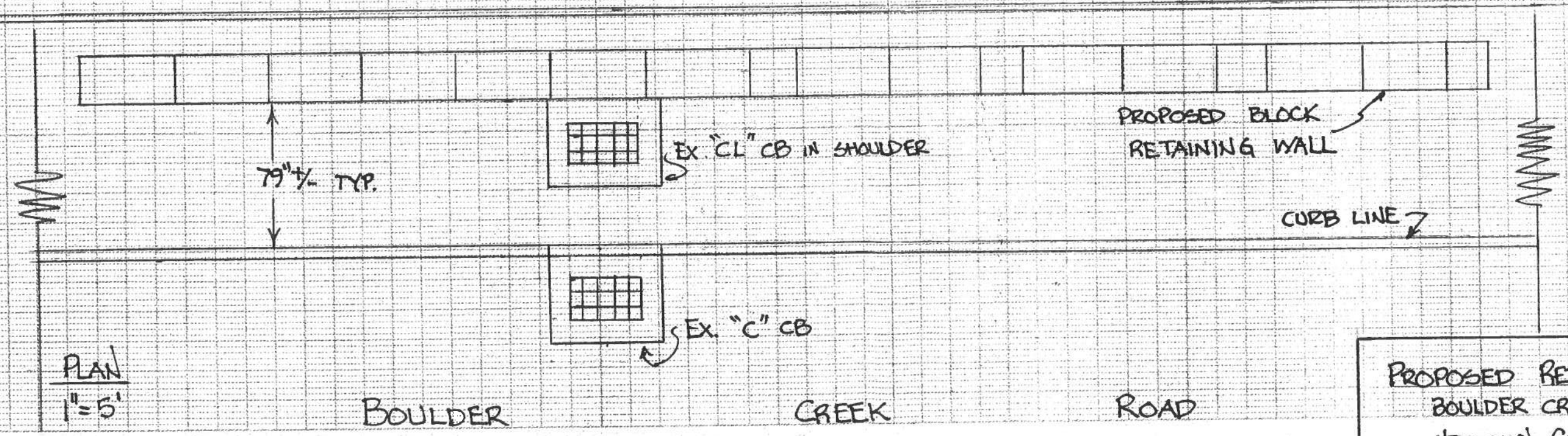

PROPOSED RETAINING WALL
BOULDER CREEK RD.
NEWTOWN, CONN.

TOWN OF NEWTOWN · ENGINEERING DEPT.
203 · 270 · 4300

1/3

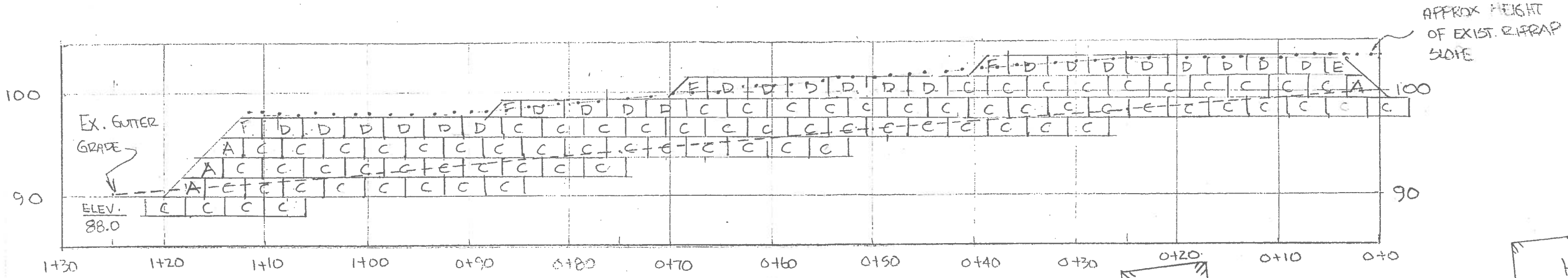

PROFILE
1"=10' HORIZ.
1"=10' VERT.

BLOCK TYPE

	C	D	F	E	A
TOP ROW 8	—	8	1	1	
7	10	6	1	—	1
6	18	4	1	—	
5	15	6	1	—	
4	15	—		—	1
3	10	—		—	1
2	8	—		—	1
BOTTOM 1	4	—	—	—	
TOTAL	80	24	7	2	4

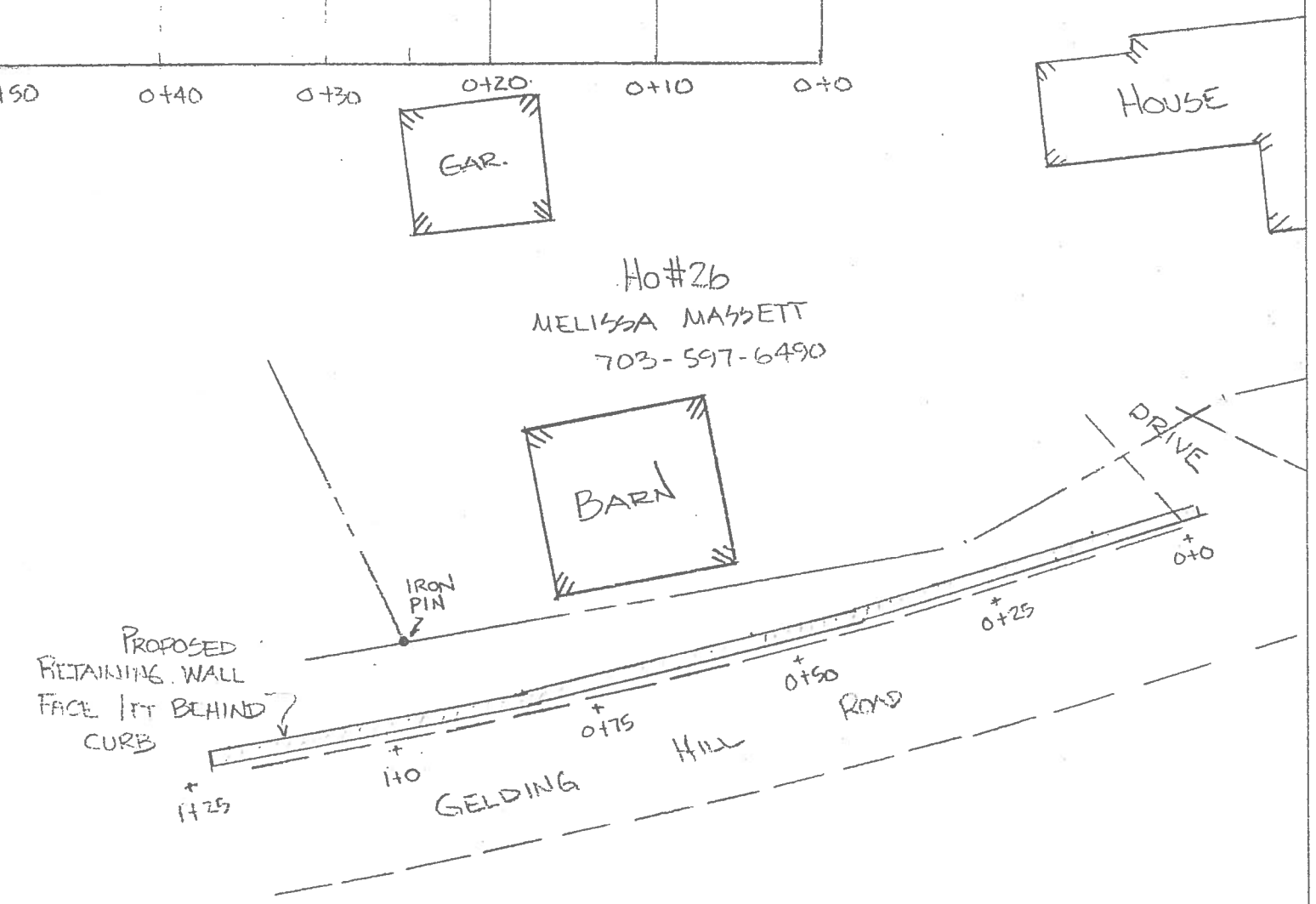

PLAN
1"=20'

PROPOSED RETAINING WALL
#26 GELDING HILL RD
SANDY HOOK, CT

TOWN OF NEWTOWN · ENGINEERING DEPT.
(203) 270-4300

2/3

WALL DIMENSIONS - TYP. BLOCKS

TYPE "C"

FULL BLOCK
WEIGHT 2,250 LBS.

8.0 SF

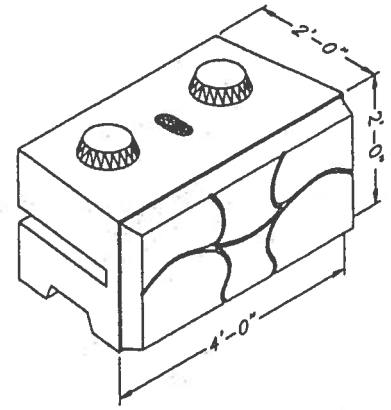

TYPE "D"

TOP FULL BLOCK
WEIGHT 2,100 LBS.

8.0 SF

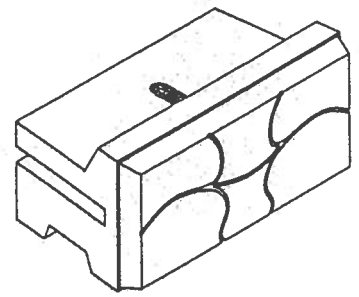

TYPE "A"

SLOPED BLOCK
OPPOSITE HAND TYPICAL
WEIGHT 2,175 LBS.

4.0 SF

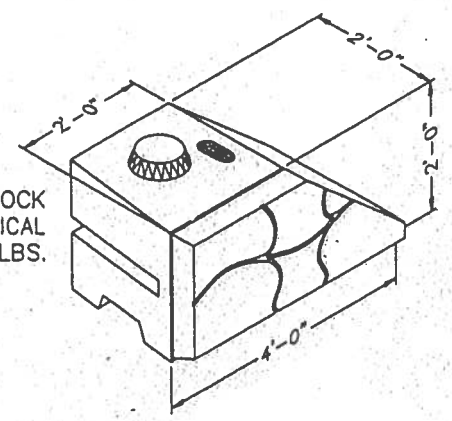

TYPE "E/F"

TOP SLOPED BLOCK
OPPOSITE HAND TYPICAL
WEIGHT 1,425 LBS.

4.0 SF

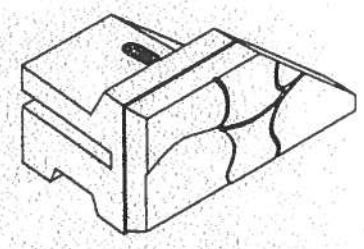

TYPE "G"

HALF OUTSIDE
CORNER BLOCK
OPPOSITE HAND TYPICAL
WEIGHT 1,400 LBS.

9.2 SF

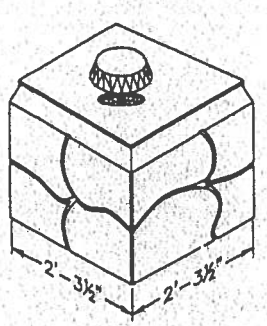

- THIS DESIGN IS BASED ON THE "EZ WALL" SYSTEM SUPPLIED BY UNITED CONCRETE OF VALLEYVILLE, CT.
- OTHER SYSTEMS ARE ACCEPTABLE IF APPROVED BY THE TOWN OF NEWTOWN ENGINEERING DEPT.

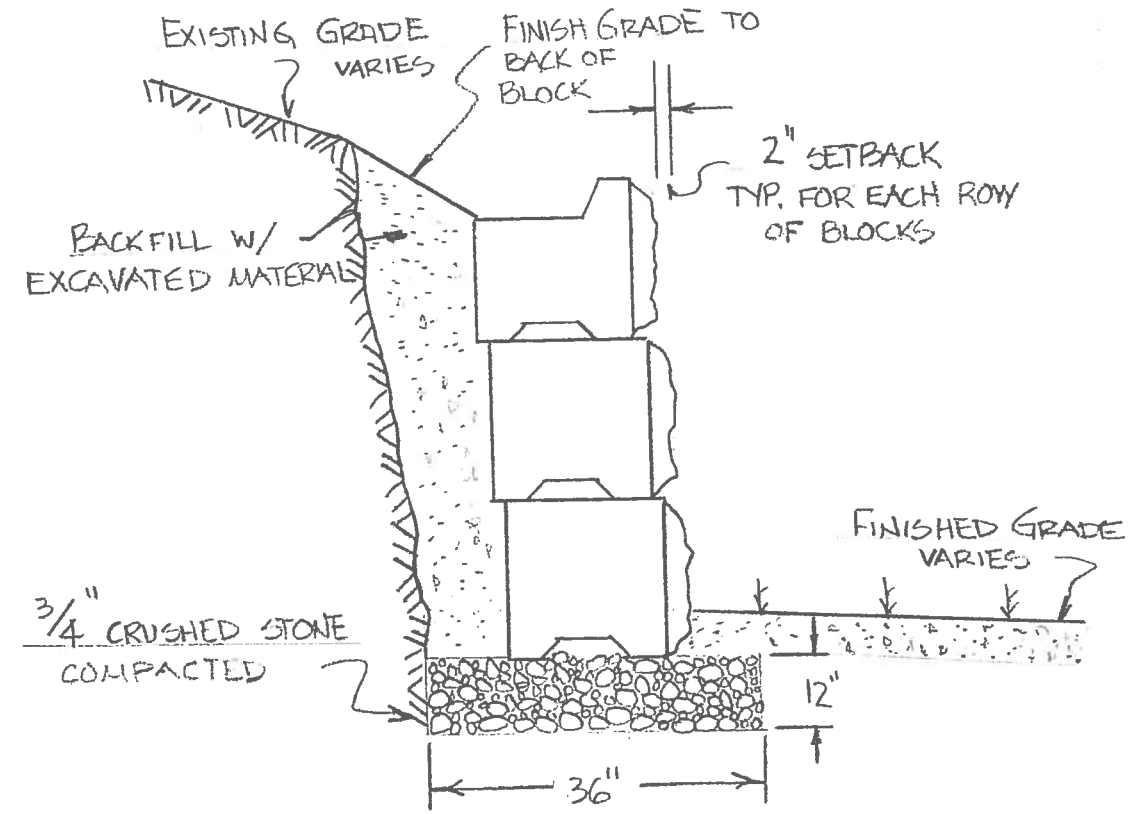

TYPICAL SECTION THRU RETAINING WALL

N.T.S

PROPOSED RETAINING WALL
BOULDER CREEK RD. / GELDING HILL RD.
NEWTOWN, CONN.

TOWN OF NEWTOWN · ENGINEERING DEPT.
203 · 270 · 4300