Stantec

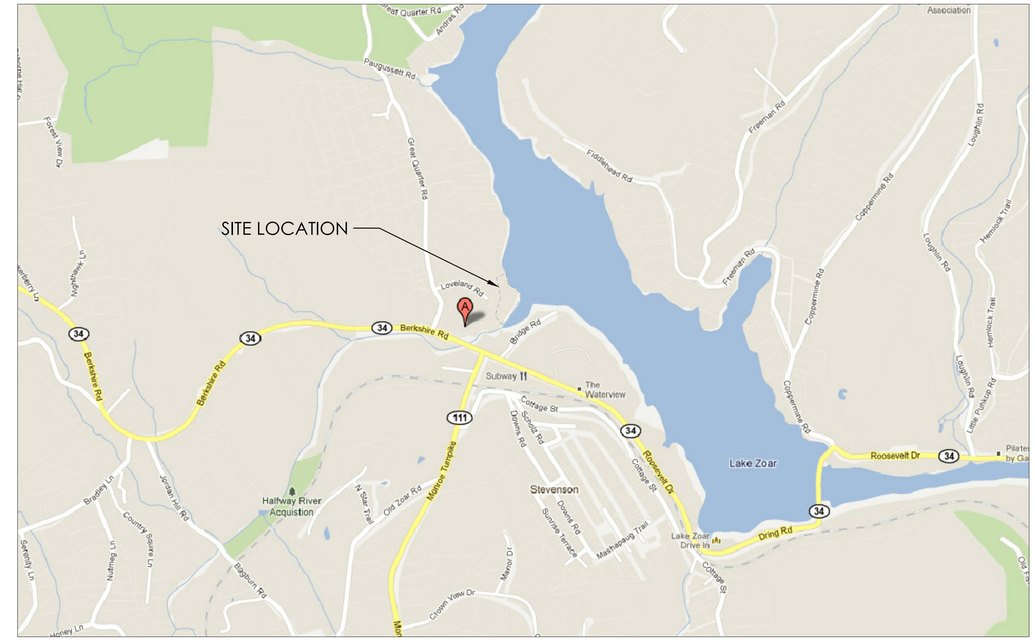

LOCATION PLAN
SCALE: NTS

EICHLER'S COVE MARINA

Parking Expansion and Improvements

NEWTOWN, CT

17 August 2016

DRAWING LIST

S-00	COVER
S-01	REMOVALS PLAN
S-02	LAYOUT AND PLANTING PLAN
S-03	GRADING PLAN
S-04	UTILITIES PLAN
S-05	SEDIMENT AND EROSION CONTROL PLAN
S-06	SEDIMENT AND EROSION CONTROL DETAILS
S-07	SITE DETAILS - 01
S-08	SITE DETAILS - 02
S-09	ELECTRICAL DETAILS
S-10	EVERSOURCE STANDARD ELECTRICAL DETAILS - 01
S-11	EVERSOURCE STANDARD ELECTRICAL DETAILS - 02

BID DOCUMENTS

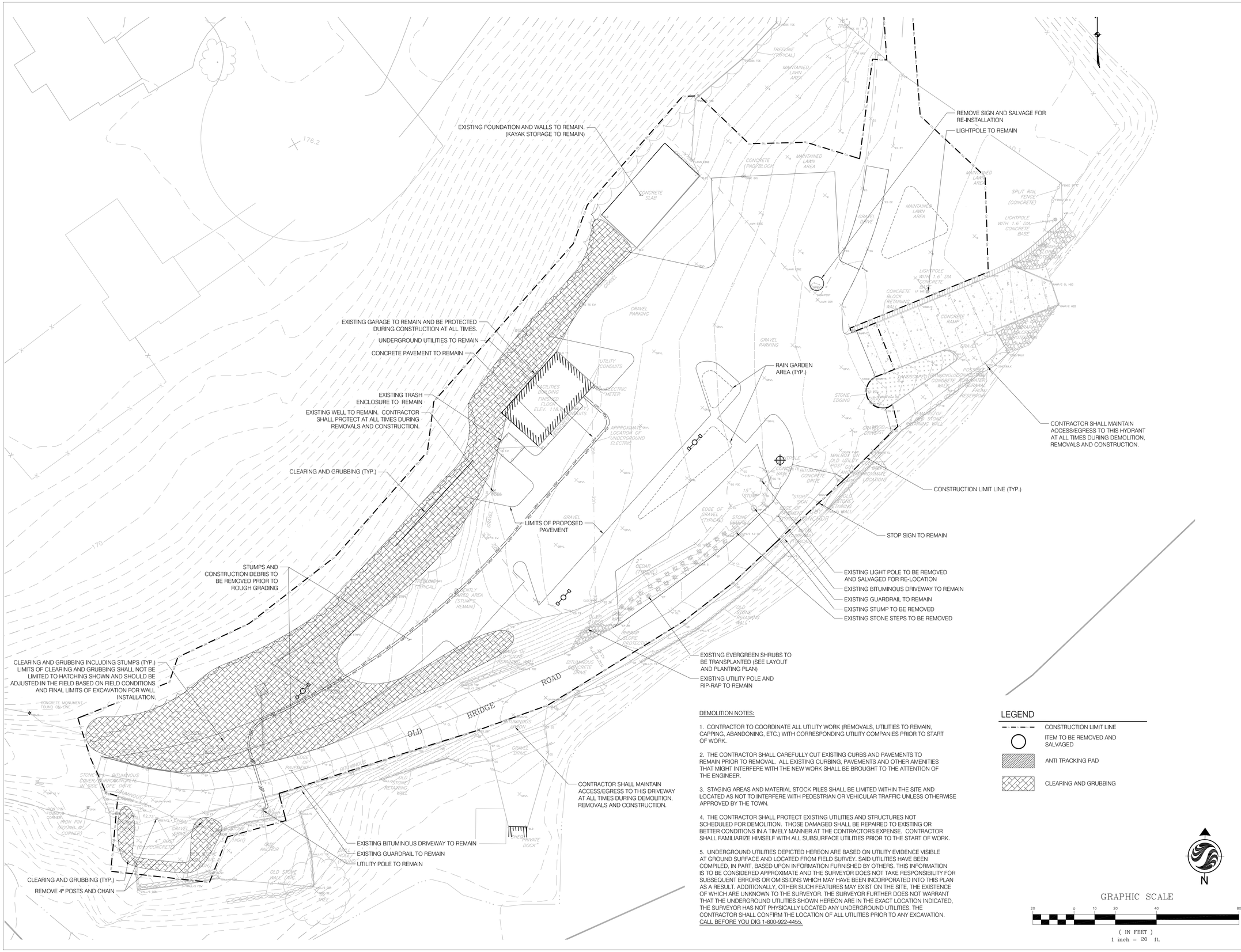

DEMOLITION NOTES:

1. CONTRACTOR TO COORDINATE ALL UTILITY WORK (REMOVALS, UTILITIES TO REMAIN, CAPPING, ABANDONING, ETC.) WITH CORRESPONDING UTILITY COMPANIES PRIOR TO START OF WORK.

2. THE CONTRACTOR SHALL CAREFULLY CUT EXISTING CURBS AND PAVEMENTS TO REMAIN PRIOR TO REMOVAL. ALL EXISTING CURBING, PAVEMENTS AND OTHER AMENITIES THAT MIGHT INTERFERE WITH THE NEW WORK SHALL BE BROUGHT TO THE ATTENTION OF THE ENGINEER.

3. STAGING AREAS AND MATERIAL STOCK PILES SHALL BE LIMITED WITHIN THE SITE AND LOCATED AS NOT TO INTERFERE WITH PEDESTRIAN OR VEHICULAR TRAFFIC UNLESS OTHERWISE APPROVED BY THE TOWN.

4. THE CONTRACTOR SHALL PROTECT EXISTING UTILITIES AND STRUCTURES NOT SCHEDULED FOR DEMOLITION. THOSE DAMAGED SHALL BE REPAIRED TO EXISTING OR BETTER CONDITIONS IN A TIMELY MANNER AT THE CONTRACTORS EXPENSE. CONTRACTOR SHALL FAMILIARIZE HIMSELF WITH ALL SUBSURFACE UTILITIES PRIOR TO THE START OF WORK.

5. UNDERGROUND UTILITIES DEPICTED HEREON ARE BASED ON UTILITY EVIDENCE VISIBLE AT GROUND SURFACE AND LOCATED FROM FIELD SURVEY. SAID UTILITIES HAVE BEEN COMPILED, IN PART, BASED UPON INFORMATION FURNISHED BY OTHERS. THIS INFORMATION IS TO BE CONSIDERED APPROXIMATE AND THE SURVEYOR DOES NOT TAKE RESPONSIBILITY FOR SUBSEQUENT ERRORS OR OMISSIONS WHICH MAY HAVE BEEN INCORPORATED INTO THIS PLAN AS A RESULT. ADDITIONALLY, OTHER SUCH FEATURES MAY EXIST ON THE SITE, THE EXISTENCE OF WHICH ARE UNKNOWN TO THE SURVEYOR. THE SURVEYOR FURTHER DOES NOT WARRANT THAT THE UNDERGROUND UTILITIES SHOWN HEREON ARE IN THE EXACT LOCATION INDICATED, THE SURVEYOR HAS NOT PHYSICALLY LOCATED ANY UNDERGROUND UTILITIES. THE CONTRACTOR SHALL CONFIRM THE LOCATION OF ALL UTILITIES PRIOR TO ANY EXCAVATION. CALL BEFORE YOU DIG 1-800-922-4455.

LEGEND

- CONSTRUCTION LIMIT LINE
- ITEM TO BE REMOVED AND SALVAGED
- ANTI TRACKING PAD
- CLEARING AND GRUBBING

N

GRAPHIC SCALE

20 0 10 20 40 80

(IN FEET)
1 inch = 20 ft.

Stantec

STANTEC Consulting Inc.
55 Church Street
Suite 601
New Haven, CT 06510
Tel: 203.495.1645 / Fax: 203.495.1652
www.stantec.com

Copyright Reserved

The Contractor shall verify and be responsible for all dimensions. DO NOT scale the drawing - any errors or omissions shall be reported to Stantec without delay.
The Copyrights to all designs and drawings are the property of Stantec. Reproduction or use for any purpose other than that authorized by Stantec is forbidden.

Consultants

Seals

Notes

Revision	By	Appd	YYYY.MM.DD

BID DOCUMENTS Issued	PSC By	TAH Appd	2016.08.17 YYYY.MM.DD

Permit-Seal

Client/Project

Eichler's Cove Marina Parking Expansion and Improvements

Newtown, CT

Title

REMOVALS PLAN

Project No.	Scale
192310611	1" = 20'-0"

Revision

Drawing No.

S-01

COORDINATE TABLE

POINT	DESCRIPTION	NORTHING (Y)	EASTING (X)
BM-1	CONCRETE MONUMENT	4872.40	9606.52
BM-2	IRON PIN	4826.57	9634.89
01	EDGE OF BIT. PAVE	4828.65	9661.75
02	EDGE OF BIT. PAVE	4825.35	9663.98
03	BACK TOP C.O.W	4823.60	9662.73
04	BACK TOP C.O.W	4806.97	9660.47
05	BACK TOP C.O.W	4804.28	9680.29
06	EDGE OF GRAVEL	4822.94	9681.82
07	EDGE OF GRAVEL	4825.54	9684.84
08	BACK TOP C.O.W	4822.81	9682.81
09	CORNER OF BIT. PAVE	4843.17	9680.69
10	EDGE OF BIT. PAVE	4845.13	9680.61
11	EDGE OF BIT. PAVE	4854.14	9664.72
12	BACK TOP C.O.W	4854.56	9718.45
13	EDGE OF BIT. PAVE	4869.17	9754.76
14	EDGE OF BIT. PAVE	4874.27	9765.33
15	EDGE OF BIT. PAVE	4880.57	9740.56
16	EDGE OF BIT. PAVE	4885.72	9740.78
17	CORNER OF BIT. PAVE	4896.72	9723.97
18	EDGE OF BIT. PAVE	4851.13	9647.62
19	CORNER OF BIT. PAVE	4851.32	9641.54
20	FRONT BOTTOM F.O.W	4887.58	9701.94
21	EDGE OF BIT. PAVE	4947.65	9790.75
22	CORNER OF BIT. PAVE	4977.44	9817.62
23	EDGE OF BIT. PAVE	4906.67	9806.66
24	BACK TOP C.O.W	4905.86	9808.71
25	EDGE OF BIT. PAVE	4974.26	9844.38
26	EDGE OF BIT. PAVE	4906.73	9810.74
27	CORNER OF BIT. PAVE	4902.21	9815.75
28	BACK TOP C.O.W	4904.36	9819.03
29	BACK TOP C.O.W	4916.31	9831.16
30	CORNER OF GRAVEL PAVE	4936.37	9846.56
31	EDGE OF BIT. PAVE	4940.39	9842.10
32	CORNER OF BIT. PAVE	4924.75	9853.58
33	CORNER OF BIT. PAVE	4943.97	9847.35
34	FRONT BOTTOM F.O.W	4989.58	9827.89
35	CORNER OF GRAVEL PAVE	4980.66	9850.15
36	EDGE OF BIT. PAVE	4998.58	9854.19
37	FRONT BOTTOM F.O.W	5008.24	9829.54
38	FRONT BOTTOM F.O.W	5023.07	9833.35
39	CORNER OF GRAVEL PAVE	5055.46	9858.40
40	FRONT BOTTOM F.O.W	5056.15	9858.35
41	CORNER OF GRAVEL PAVE	5096.61	9895.53
42	FRONT BOTTOM F.O.W	5096.95	9895.16
43	EDGE OF GRAVEL PAVE	5088.58	9933.16
44	EDGE OF GRAVEL PAVE	5093.73	9939.20
45	EDGE OF BIT. PAVE	5030.94	9888.77
46	CORNER OF GRAVEL PAVE	5042.20	9898.93
47	EDGE OF GRAVEL PAVE	5047.15	9897.33
48	POINT NOT USED		
49	POINT NOT USED		
50	CORNER OF GRAVEL PAVE	5132.16	9937.22
51	CORNER OF GRAVEL PAVE	5135.24	9997.14
52	POINT NOT USED		
53	CORNER OF GRAVEL WALK	5092.00	9999.91
54	CORNER OF GRAVEL WALK	5087.80	10008.96
55	POINT NOT USED		
56	POINT NOT USED		
57	POINT NOT USED		
58	POINT NOT USED		
59	EDGE OF BIT. PAVE	5064.95	10000.76
60	EDGE OF BIT. PAVE	5058.28	10001.10
61	POINT NOT USED		
62	POINT NOT USED		
63	POINT NOT USED		
64	CORNER OF GRAVEL PAVE	5016.65	9969.37
65	CORNER OF GRAVEL PAVE	5003.00	9959.54
66	CENTER OF LIGHT POLE	4995.20	9970.61
67	CORNER OF STONE EDGING	4988.45	9997.97
68	CORNER OF GRAVEL PAVE	4982.43	9971.35
69	EDGE OF GRAVEL PAVE	4982.78	9966.49
70	EDGE OF GRAVEL PAVE	4918.73	9892.31
71	CORNER OF GRAVEL PAVE	4941.35	9890.72
72	EDGE OF GRAVEL PAVE	5003.70	9953.84
73	CORNER OF GRAVEL PAVE	5015.58	9940.32
74	EDGE OF GRAVEL PAVE	5026.84	9950.22
75	CORNER OF GRAVEL PAVE	5033.90	9949.77
76	CORNER OF H.C. BIT. PAVE	5017.21	9936.98
77	EDGE OF BIT. PAVE	5040.79	9941.92
78	EDGE OF BIT. PAVE	5042.62	9931.74
79	EDGE OF BIT. PAVE	5038.89	9929.96
80	CORNER OF H.C. BIT. PAVE	5018.36	9908.40
81	CORNER OF H.C. BIT. PAVE	4994.20	9916.23
82	CENTER OF LIGHT POLE	5018.96	9939.00
83	CENTER OF LIGHT POLE	4925.92	9860.03

* COORDINATE SYSTEM IS BASED ON AN ASSUMED HORIZONTAL DATUM USING EXISTING BENCHMARKS AS SURVEYED IN THE FIELD.

NOTES:

1. CONTRACTOR SHALL PERFORM ALL EXCAVATION CAREFULLY AND IS RESPONSIBLE FOR REPAIR OF ANY UNDERGROUND UTILITIES DAMAGED AS A RESULT OF HIS/HER WORK.
2. ALL MATERIALS AND METHODS OF PAVEMENT CONSTRUCTION SHALL CONFORM TO THE STATE OF CONNECTICUT D.O.T. STANDARD SPECIFICATIONS FOR ROADS, BRIDGES AND INCIDENTAL CONSTRUCTION, FORM 816, LATEST EDITION, UNLESS OTHERWISE SPECIFIED HEREIN.
3. CONTRACTOR IS TO FIELD VERIFY ALL EXISTING CONDITIONS. THE OWNER'S REPRESENTATIVE SHOULD BE NOTIFIED OF ANY DISCREPANCIES, OMISSIONS, CONFLICTS OR INTERFERENCES WHICH OCCUR BETWEEN VARIOUS DRAWINGS AND ACTUAL FIELD CONDITIONS. IF SUCH NOTIFICATION IS NOT RECEIVED, THE CONTRACTOR(S) SHALL BE RESPONSIBLE FOR THEIR INTERPRETATIONS.
4. CONTRACTOR IS RESPONSIBLE FOR ANY DAMAGED LAWN AREAS DUE TO CONSTRUCTION. DAMAGED AREAS MUST BE UNCOMPACTED, REPAIRED, FINE GRADED AND RESEEDED TO MATCH EXISTING USING APPROPRIATE SEED MIX (SUN OR SHADE).
5. CONTRACTOR SHALL CLEAN UP ALL DEBRIS FROM INSTALLATION PROCEDURES AND REMOVE FROM SITE ALL EXCESS MATERIALS, DEBRIS AND EQUIPMENT. CONTRACTOR SHALL DISPOSE OF MATERIAL LEGALLY AND PROMPTLY.
6. ALL LINE STRIPING FOR PARKING LOT STALLS SHALL BE PLACED UNDER DEDUCT ALTERNATE #5. SEE SPECIFICATION 01 23 00.

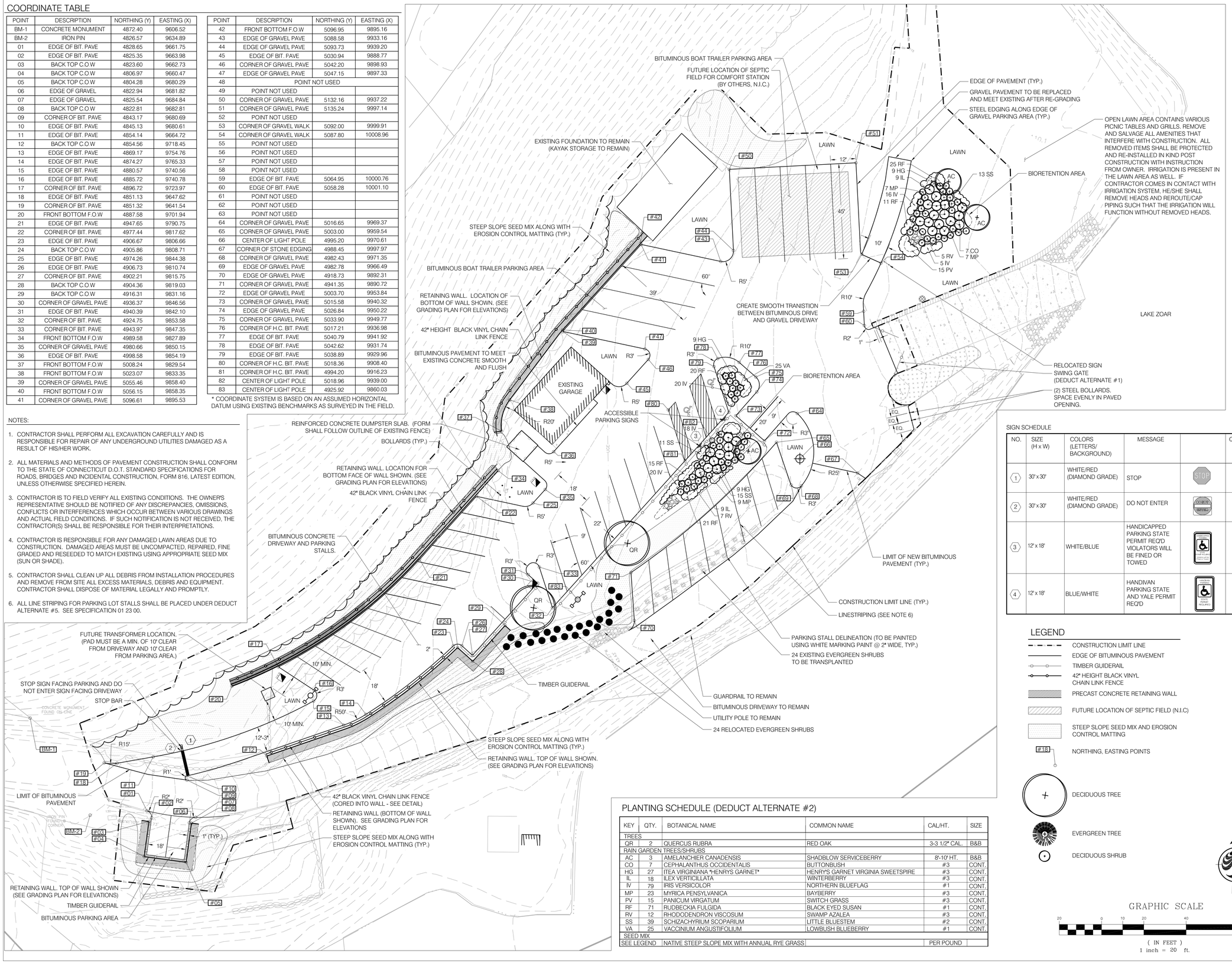

SIGN SCHEDULE

NO.	SIZE (H x W)	COLORS (LETTERS/ BACKGROUND)	MESSAGE		QTY.
1	30" x 30"	WHITE/RED (DIAMOND GRADE)	STOP	STOP	1
2	30" x 30"	WHITE/RED (DIAMOND GRADE)	DO NOT ENTER	DO NOT ENTER	1
3	12" x 18"	WHITE/BLUE	HANDICAPPED PARKING STATE PERMIT REQ'D VIOLATORS WILL BE FINED OR TOWED	HANDICAPPED PARKING STATE PERMIT REQ'D VIOLATORS WILL BE FINED OR TOWED	1
4	12" x 18"	BLUE/WHITE	HANDIVAN PARKING STATE AND YALE PERMIT REQ'D	HANDICAPPED PARKING STATE PERMIT REQ'D YALE PERMIT REQ'D	1

LEGEND

- CONSTRUCTION LIMIT LINE
- EDGE OF BITUMINOUS PAVEMENT
- TIMBER GUIDERAIL
- 42" HEIGHT BLACK VINYL CHAIN LINK FENCE
- PRECAST CONCRETE RETAINING WALL
- FUTURE LOCATION OF SEPTIC FIELD (N.I.C)
- STEEP SLOPE SEED MIX AND EROSION CONTROL MATTING
- #18 NORTHING, EASTING POINTS
- DECIDUOUS TREE
- EVERGREEN TREE
- DECIDUOUS SHRUB

N

GRAPHIC SCALE

20 0 10 20 40 80

(IN FEET)
1 inch = 20 ft.

PLANTING SCHEDULE (DEDUCT ALTERNATE #2)

KEY	QTY.	BOTANICAL NAME	COMMON NAME	CAL/HT.	SIZE
TREES					
QR	2	QUERCUS RUBRA	RED OAK	3-3 1/2" CAL.	B&B
RAIN GARDEN TREES/SHRUBS					
AC	3	AMELANCHIER CANADENSIS	SHADBLOW SERVICEBERRY	8'-10' HT.	B&B
CO	7	CEPHALANTHUS OCCIDENTALIS	BUTTONBUSH	#3	CONT.
HG	27	ITEA VIRGINIANA "HENRYS GARNET"	HENRYS GARNET VIRGINIA SWEETSPIRE	#3	CONT.
IL	18	ILEX VERTICILLATA	WINTERBERRY	#3	CONT.
IV	79	IRIS VERSICOLOR	NORTHERN BLUEFLAG	#1	CONT.
MP	23	MYRICA PENSYLVANICA	BAYBERRY	#3	CONT.
PV	15	PANICUM VIRGATUM	SWITCH GRASS	#3	CONT.
RF	71	RUDBECKIA FULGIDA	BLACK EYED SUSAN	#1	CONT.
RV	12	RHODODENDRON VISCOSUM	SWAMP AZALEA	#3	CONT.
SS	39	SCHIZACHYRIUM SCOPARIUM	LITTLE BLUESTEM	#2	CONT.
VA	25	VACCINIUM ANGUSTIFOLIUM	LOWBUSH BLUEBERRY	#1	CONT.
SEED MIX					
SEE LEGEND		NATIVE STEEP SLOPE MIX WITH ANNUAL RYE GRASS		PER POUND	

Stantec

STANTEC Consulting Inc.
55 Church Street
Suite 601
New Haven, CT 06510
Tel: 203.495.1645 / Fax: 203.495.1652
www.stantec.com

Copyright Reserved

The Contractor shall verify and be responsible for all dimensions. DO NOT scale the drawing - any errors or omissions shall be reported to Stantec without delay.
The Copyrights to all designs and drawings are the property of Stantec. Reproduction or use for any purpose other than that authorized by Stantec is forbidden.

Consultants

Seals

Notes

Revision	By	Appd	YYYY.MM.DD

BID DOCUMENTS	PSC	TAH	2016.08.17
Issued	By	Appd	YYYY.MM.DD

Permit-Seal

Client/Project

Eichler's Cove Marina Parking Expansion and Improvements

Newtown, CT

Title

LAYOUT AND PLANTING PLAN

Project No.	Scale
192310611	1" = 20'-0"
Revision	Drawing No.
	S-02

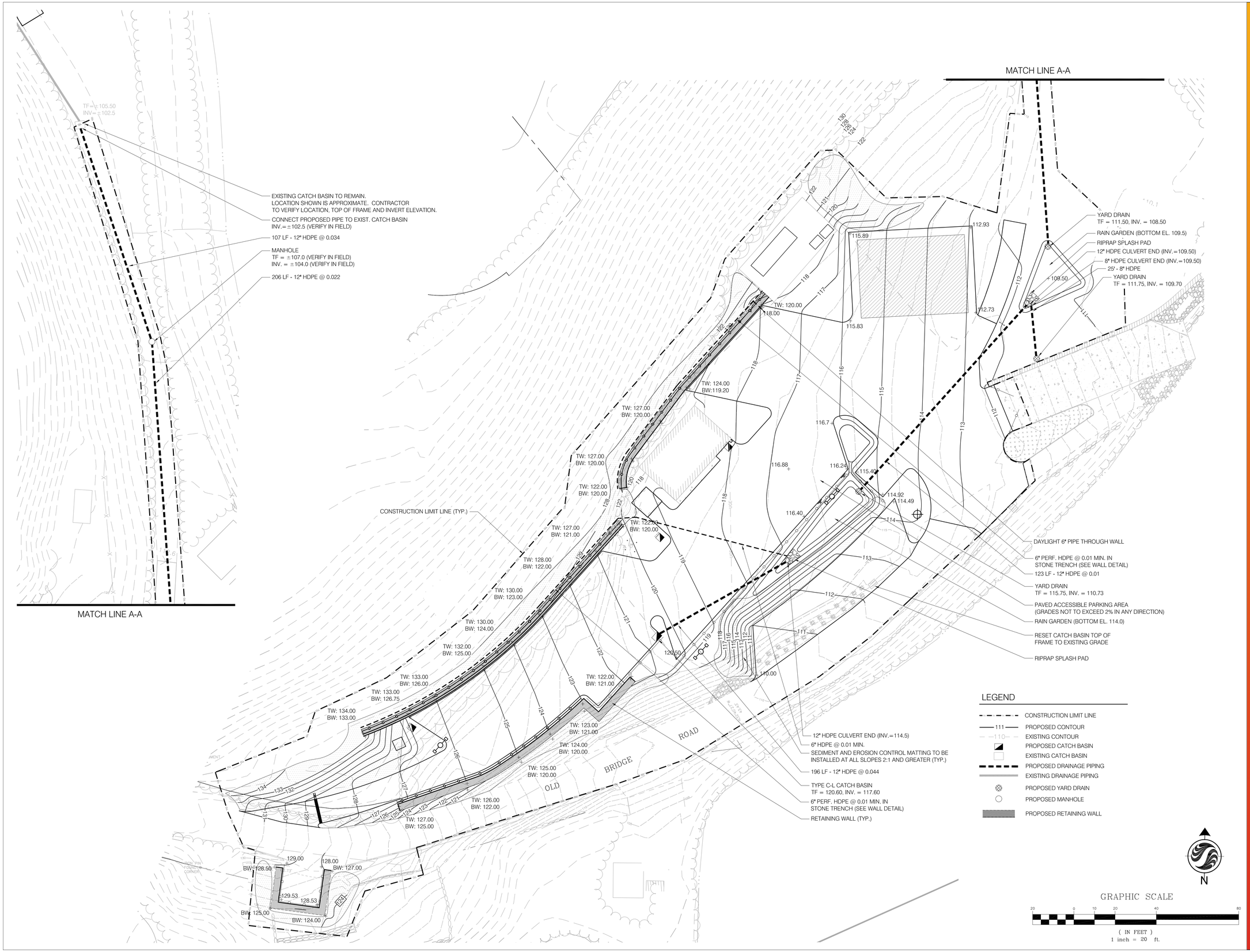

MATCH LINE A-A

Stantec

STANTEC Consulting Inc.
55 Church Street
Suite 601
New Haven, CT 06510
Tel: 203.495.1645 / Fax: 203.495.1652
www.stantec.com

Copyright Reserved

The Contractor shall verify and be responsible for all dimensions. DO NOT scale the drawing - any errors or omissions shall be reported to Stantec without delay.
The Copyrights to all designs and drawings are the property of Stantec. Reproduction or use for any purpose other than that authorized by Stantec is forbidden.

Consultants

Seals

Notes

Revision	By	Appd	YYYY.MM.DD

BID DOCUMENTS	PSC	TAH	2016.08.17
Issued	By	Appd	YYYY.MM.DD

Permit-Seal

Client/Project

Eichler's Cove Marina Parking Expansion and Improvements

Newtown, CT

Title

GRADING AND DRAINAGE PLAN

Project No.	Scale
192310611	1" = 20'-0"
Revision	Drawing No.
	S-03

NOTES - FOR ELECTRICAL SERVICE GROUND TRANSFORMER INFRASTRUCTURE:

*THE FOLLOWING NOTES HAVE BEEN TAKEN FROM CONNECTICUT LIGHT AND POWER DOCUMENT ENTITLED *REQUIREMENTS FOR UNDERGROUND RESIDENTIAL INSTALLATION - SINGLE PHASE* THE CONTRACTOR IS RESPONSIBLE FOR COORDINATION WITH EVERSOURCE DURING INSTALLATION TO ENSURE MEETING ALL REQUIREMENTS AND STANDARDS REQUIRED FOR THIS INSTALLATION.

- ALL UNDERGROUND WIRES (PRIMARY, SECONDARY, AND SERVICES) WILL BE INSTALLED IN CONDUIT
- CONDUIT MINIMUM SIZE WILL BE 3 INCHES UNLESS NOTIFIED OTHERWISE
- CONDUIT MINIMUM TYPE WILL BE PVC SCHEDULE 40 ELECTRIC
- MINIMUM OF ½ INCH NYLON PULL CORD MUST BE INSTALLED AND SECURED IN CONDUIT WHICH IS TO CAPPED AT BOTH ENDS
- 90° GALVANIZED STEEL BEND WITH 24 INCH RADIUS IS REQUIRED AT POLE
- 90° SCHEDULE 40 PVC BEND IS REQUIRED AT BUILDING
- MAINTAIN CONDUIT SIZE FROM ONE END TO THE OTHER
- TRENCH DEPTH REQUIRED IS 36 INCHES
- INSTALL DB WARNING TAPE 12 INCHES ABOVE CONDUIT
- BACKFILL SHALL BE CLEAN FILL WITH STONES NO LARGER THAN TWO INCHES IN DIAMETER
- PULL BOXES MAY BE REQUIRED DEPENDING ON LENGTH OF RUN AND TERRAIN

CUSTOMER'S RESPONSIBILITIES - PRIMARY AND SECONDARY:

- SUPPLY AND INSTALL ALL CONCRETE PADS AND VAULTS (SPECIFICATIONS AND LIST OF MANUFACTURERS SHOWN ON SHEET S-10.)
- ALL TRENCHING (INCLUDES AND ADVERSE SOIL CONDITIONS) AND BACKFILLING
- SUPPLY, INSTALL, AND GLUE ALL CONDUIT AND COUPLINGS
- INSURE PULL CORDS ARE INSTALLED AND SECURED WITH CONDUIT ENDS CAPPED
- AT VAULTS, INSTALL CONDUIT THROUGH KNOCKOUT TO 4 INCHES INSIDE VAULT FOR NEW INSTALLATIONS ONLY
- TRENCH DEPTH TO BE 36 INCHES FROM FINAL GRADE
- AT LOT CORNERS FOR SERVICES, INSTALL GRADUAL SWEEPS
- PROVIDE EVERSOURCE (THE CL&P COMPANY), WITHOUT COST, A FULLY-EXECUTED EASEMENT AS INDICATED BY EVERSOURCE (CL&P) CONSULTANT OR TECHNICIAN
- MAINTAIN A MINIMUM OF 18 INCH CLEARANCE TO ADJACENT SEWER, WATER, FUEL (GAS & OIL) LINES, AND BUILDING FOUNDATIONS

SEE SHEET S-10 FOR EVERSOURCE (CL&P) STANDARD SPECIFICATIONS AND DETAILS. WHAT IS SHOWN MAY NOT BE COMPLETE. IT IS THE CONTRACTORS RESPONSIBILITY TO COORDINATE THE INSTALLATION WITH THE UTILITY COMPANY AND OBTAIN ANY ADDITIONAL INFORMATION NEEDED. THE CONTRACTOR MUST ALSO FOLLOW ALL STATE AND LOCAL BUILDING CODES FOR INSTALLATION.

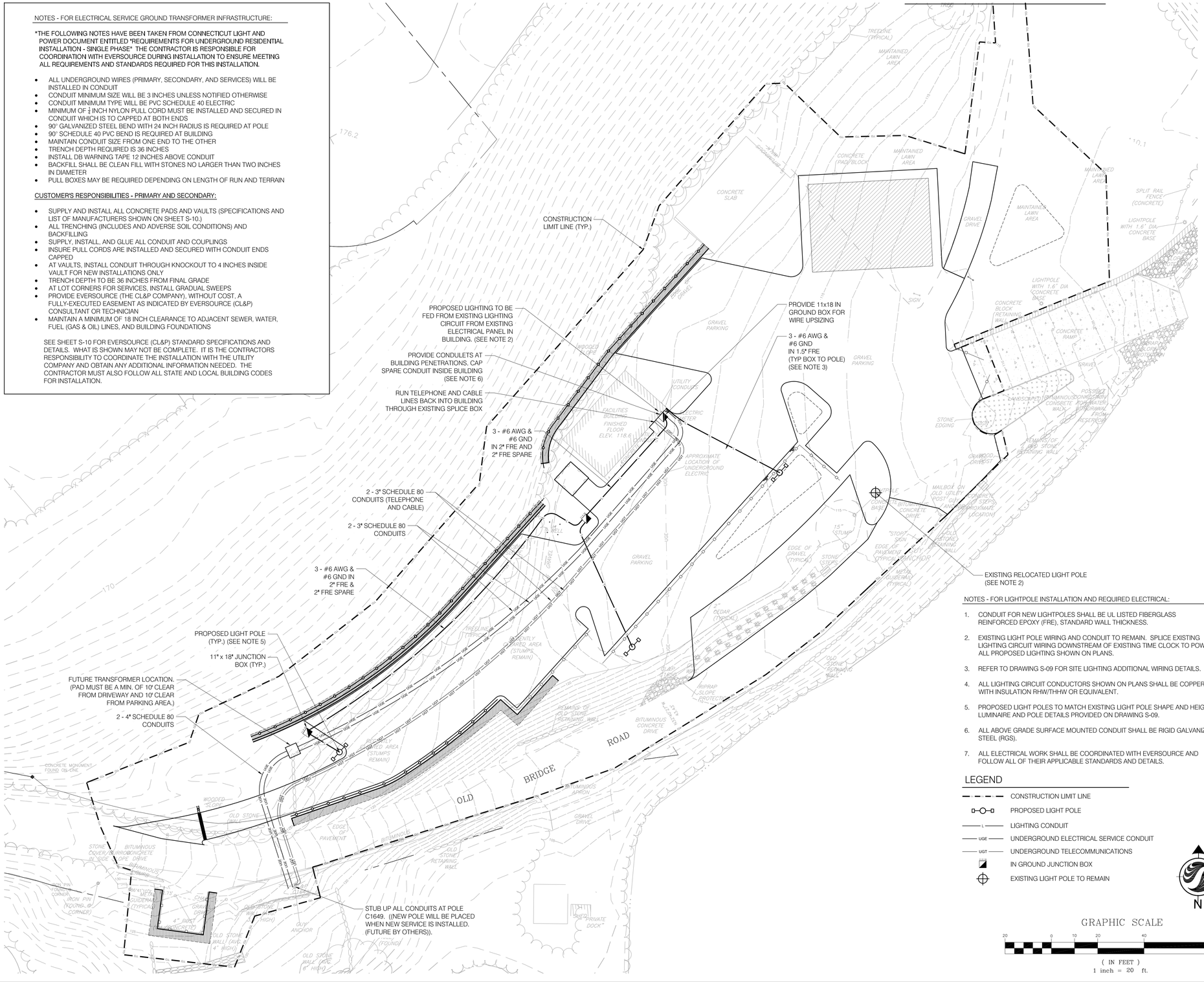

NOTES - FOR LIGHTPOLE INSTALLATION AND REQUIRED ELECTRICAL:

1. CONDUIT FOR NEW LIGHTPOLES SHALL BE UL LISTED FIBERGLASS REINFORCED EPOXY (FRE), STANDARD WALL THICKNESS.
2. EXISTING LIGHT POLE WIRING AND CONDUIT TO REMAIN. SPLICE EXISTING LIGHTING CIRCUIT WIRING DOWNSTREAM OF EXISTING TIME CLOCK TO POWER ALL PROPOSED LIGHTING SHOWN ON PLANS.
3. REFER TO DRAWING S-09 FOR SITE LIGHTING ADDITIONAL WIRING DETAILS.
4. ALL LIGHTING CIRCUIT CONDUCTORS SHOWN ON PLANS SHALL BE COPPER WITH INSULATION RHW/THHW OR EQUIVALENT.
5. PROPOSED LIGHT POLES TO MATCH EXISTING LIGHT POLE SHAPE AND HEIGHT, LUMINAIRE AND POLE DETAILS PROVIDED ON DRAWING S-09.
6. ALL ABOVE GRADE SURFACE MOUNTED CONDUIT SHALL BE RIGID GALVANIZED STEEL (RGS).
7. ALL ELECTRICAL WORK SHALL BE COORDINATED WITH EVERSOURCE AND FOLLOW ALL OF THEIR APPLICABLE STANDARDS AND DETAILS.

LEGEND

- CONSTRUCTION LIMIT LINE
- PROPOSED LIGHT POLE
- L — LIGHTING CONDUIT
- UGE — UNDERGROUND ELECTRICAL SERVICE CONDUIT
- UGT — UNDERGROUND TELECOMMUNICATIONS
- IN GROUND JUNCTION BOX
- EXISTING LIGHT POLE TO REMAIN

N

GRAPHIC SCALE

20 0 10 20 40 80

(IN FEET)
1 inch = 20 ft.

Stantec

STANTEC Consulting Inc.
55 Church Street
Suite 601
New Haven, CT 06510
Tel: 203.495.1645 / Fax: 203.495.1652
www.stantec.com

Copyright Reserved

The Contractor shall verify and be responsible for all dimensions. DO NOT scale the drawing - any errors or omissions shall be reported to Stantec without delay.
The Copyrights to all designs and drawings are the property of Stantec. Reproduction or use for any purpose other than that authorized by Stantec is forbidden.

Consultants

Seals

Notes

Revision	By	Appd	YYYY.MM.DD

BID DOCUMENTS	PSC	TAH	2016.08.17
Issued	By	Appd	YYYY.MM.DD

Permit-Seal

Client/Project

Eichler's Cove Marina Parking Expansion and Improvements

Newtown, CT

Title

UTILITIES PLAN

Project No. 192310611

Scale 1" = 20'-0"

Revision

Drawing No. S-04

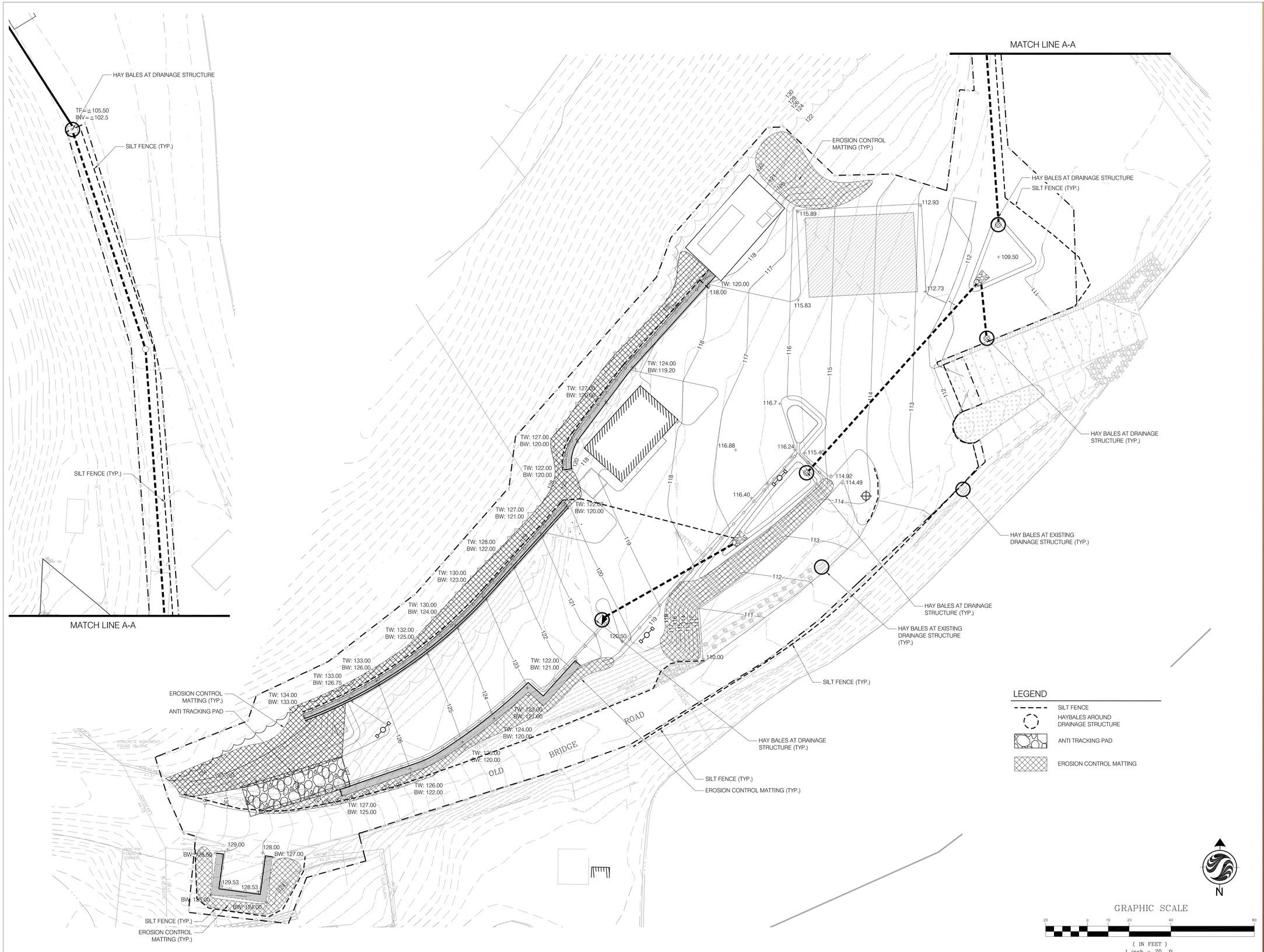

Stantec

STANTEC Consulting Inc.
55 Church Street
Suite 601
New Haven, CT 06510
Tel: 203.495.1645 / Fax: 203.495.1652
www.stantec.com

Copyright Reserved

The Contractor shall verify and be responsible for all dimensions. DO NOT scale the drawing - any errors or omissions shall be reported to Stantec without delay.
The Copyrights to all designs and drawings are the property of Stantec. Reproduction or use for any purpose other than that authorized by Stantec is forbidden.

Consultants

Seals

Notes

Revision	By	Appd	YYYY.MM.DD

BID DOCUMENTS	PSC	TAH	2016.08.17
Issued	By	Appd	YYYY.MM.DD

Permit-Seal

Client/Project

Eichler's Cove Marina Parking Expansion and Improvements

Newtown, CT

Title

SEDIMENT AND EROSION CONTROL PLAN

Project No.	Scale
192310611	1" = 20'-0"

Revision	Drawing No.
	S-05

PROJECT DESCRIPTION:

THE PROJECT CONSISTS OF THE RECONSTRUCTION OF AREAS OF EICHLER'S COVE PARK, INCLUDING PARKING AREAS, ASSOCIATED GRADING AND DRAINAGE IMPROVEMENTS, AND OTHER SITE AMENITIES.

THE INTENT OF THE SEDIMENT AND EROSION CONTROL PLAN IS TO COLLECT SEDIMENT IN RUNOFF DURING CUTTING AND FILLING OPERATIONS BEFORE CONSTRUCTION AREAS ARE STABILIZED. SEDIMENT AND EROSION CONTROL MEASURES AS DESCRIBED HEREIN SHALL BE INSTALLED WHERE SHOWN IN THE PLANS AND AS DIRECTED BY THE ENGINEER OR OWNER. EXISTING DRAINAGE CHANNELS AND STORM DRAINAGE STRUCTURES WILL BE MAINTAINED AND PROTECTED DURING CONSTRUCTION UNTIL NEW DRAINAGE APPURTENANCES, WHERE PROPOSED, ARE OPERATIONAL.

CONSTRUCTION SEQUENCE: THE GENERAL SEQUENCE OF CONSTRUCTION SHALL PROCEED AS FOLLOWS:

- INSTALLATION OF PERIMETER EROSION/SILTATION CONTROL MEASURES, ANTI-TRACKING PAD, AND FENCE OFF AREAS LIMITED TO HEAVY EQUIPMENT
- REMOVAL OF ALL PAVEMENT/GRAVEL, STRUCTURES AND UTILITIES TO BE REMOVED
- CLEARING AND GRUBBING: VEGETATION AND STUMPS ARE TO BE DISPOSED OF IN A LEGAL AND ENVIRONMENTALLY SAFE MANOR.
- TOPSOIL REMOVAL AND STOCKPILING: STOCK PILE MATERIAL TO BE PLACED IN DESIGNATED AREAS DETERMINED AS PROJECT PROCEEDS. ALL STOCKPILES TO BE STABILIZED UPON COMPLETION OF DUMPING SEQUENCE AT EACH LOCATION.
- ESTABLISH ROUGH SUBGRADES FOR DRIVEWAY AND PARKING AREAS.
- SITE STORMWATER RUNOFF FROM DISTURBED AREAS TO BE DIRECTED VIA TEMPORARY SWALES OR DIVERSION DIKES TO SEDIMENT BASINS AS NECESSARY. ACTUAL LOCATIONS TO BE DETERMINED IN THE FIELD BY THE CONTRACTOR AS CONSTRUCTION DICTATES.
- DISCHARGES FROM DEWATERING OF EXCAVATION SHALL NOT BE DIVERTED DIRECTLY INTO ANY EXISTING STORM DRAIN OR WATERCOURSE WITHOUT PRETREATMENT VIA SEDIMENT BASIN OR TEMPORARY SEDIMENT CONTROL POOL
- MAINTAIN ANTI-TRACKING PAD AND INSPECT EROSION CONTROL MEASURES.
- CONSTRUCT SITE RETAINING WALLS.
- STABILIZE ALL CUT OR DISTURBED AREAS WITH TOPSOIL, SEED AND MULCH.
- EXCAVATION AND INSTALLATION OF DRAINAGE SYSTEM AND UTILITY CONDUITS
- INSTALLATION OF INTERNAL EROSION CONTROLS AS AREAS ONSITE ARE STABLIZED AND CONSTRUCTION PROGRESSES (AS NECESSARY)
- CONSTRUCT DRIVEWAYS AND PARKING AREAS
- TOPSOIL AND FINAL SEEDING OF ALL DISTURBED AREAS AND OTHER AREAS WITHIN SITE AS DIRECTED BY OWNER'S REPRESENTATIVE
- INSTALLATION OF LIGHTING AND LANDSCAPING
- INSPECT AND CLEAN DRAINAGE SYSTEM
- REMOVAL OF PERIMETER EROSION CONTROL MEASURES
- FINAL CLEAN-UP

SEDIMENTATION AND EROSION CONTROL NOTES:

1. SILTATION AND EROSION CONTROL MEASURES SHALL BE INSTALLED AS NECESSARY PRIOR TO THE START OF GRADING AND MAINTAINED UNTIL ALL GROUND SURFACES ARE STABILIZED I.E. WITH TURF, PAVEMENT, ETC., AND SHALL CONSIST OF SILT FENCING, HAY BALES, TEMPORARY SEDIMENTATION BASINS AND SWALES, MULCH AND TEMPORARY SEEDING.

2. THE OWNER HAS THE AUTHORITY TO CONTROL THE SURFACE AREA OF EARTH MATERIALS EXPOSED BY CONSTRUCTION OPERATIONS AND TO DIRECT THE CONTRACTOR TO IMMEDIATELY PROVIDE PERMANENT OR TEMPORARY POLLUTION CONTROL MEASURES TO PREVENT CONTAMINATION OF ADJACENT STREAMS, WATERCOURSES, LAKES, PONDS, OR OTHER AREAS OF WATER IMPOUNDMENT BY CONSTRUCTION OPERATIONS. EVERY EFFORT SHALL BE MADE BY THE CONTRACTOR TO PREVENT EROSION ON THE SITE AND/OR ONTO ABUTTING PROPERTY.

3. THE ENGINEER HAS THE AUTHORITY TO DIRECT THE CONTRACTOR TO DIVERT SURFACE WATER RUN-OFF AWAY FROM EXPOSED RAW EARTH SURFACES THROUGH THE USE OF TEMPORARY BERMS, DIKES, DIVERSION CHANNELS AND/OR OTHER DIVERSION TECHNIQUES APPROVED BY THE CITY'S REPRESENTATIVE AND THE ENGINEER.

4. THE EROSION CONTROL FEATURES SHALL BE INSTALLED AND MAINTAINED BY THE CONTRACTOR AND SHALL BE CHECKED DAILY AND AFTER EACH SEVERE RAIN STORM FOR DAMAGE, UNTIL SUCH FEATURES ARE, IN THE OPINION OF THE ENGINEER, NO LONGER NEEDED. ALL SEDIMENTATION TRAPS AND SEDIMENTATION BASINS SHALL HAVE THE ACCUMULATED SEDIMENT AND/OR CLEAN WATER REMOVED BEFORE IT SIGNIFICANTLY REDUCES THEIR STORAGE VOLUME OR FUNCTION, PRIOR TO THE NEXT RAIN STORM FORECAST FOR THE REGION.

5. THE CONTRACTOR SHALL, AT ALL TIMES, HAVE ON HAND THE NECESSARY MATERIALS AND EQUIPMENT TO PROVIDE FOR EARLY SLOPE STABILIZATION AND CORRECTIVE MEASURES TO DAMAGED SLOPES. THE CONTRACTOR SHALL RESPOND TO MAINTENANCE OR ADDITIONAL MEASURES ORDERED BY THE ENGINEER WITHIN 24 HOURS.

6. THE CONTRACTOR SHALL OPERATE ALL EQUIPMENT AND PERFORM ALL CONSTRUCTION OPERATIONS SO AS TO MINIMIZE POLLUTION TO ADJACENT WATER COURSES OR WETLANDS AREAS. THE CONTRACTOR SHALL CEASE ANY OF HIS OPERATIONS WHICH WILL INCREASE POLLUTION DURING RAIN STORMS.

7. ALL SLOPES OF STOCKPILE MATERIAL AND OTHER DISTURBED AREAS SHALL BE STABILIZED AND PROTECTED BY SURROUNDING WITH SILT FENCING OR HAY BALES, OR OTHERWISE PROTECTED AS APPROVED BY THE ENGINEER. ALL DAMAGED AREAS SHALL BE REPAIRED AS SOON AS POSSIBLE. THE ENGINEER SHALL LIMIT THE SURFACE AREA OF EACH MATERIAL EXPOSED IF THE CONTRACTOR FAILS TO SUFFICIENTLY PROTECT THE SLOPES TO PREVENT POLLUTION.

8. MULCHES: SHALL BE HAY, STRAW, WOOD CELLULOSE, WOOD CHIPS, STONE, NETTING, BURLAP OR OTHER SUITABLE MULCH MATERIAL AS APPROVED BY THE ENGINEER. MULCHES SHALL BE REASONABLY CLEAN AND FREE OF NOXIOUS WEEDS AND DELETERIOUS MATERIALS. ASPHALT SPRAYS WILL NOT BE ALLOWED. THE CONTRACTOR SHALL PREVENT STRAW, WOOD CHIPS, ETC., FROM ENTERING ANY CATCH BASINS, RESERVOIRS OR WATERCOURSES.

9. HAY BALES: SHALL BE PLACED AROUND ALL EXISTING DRAINAGE INLETS OR AS DIRECTED BY THE ENGINEER. THEY SHALL BE HELD IN PLACE BY TWO WOODEN STAKES IN EACH BALE. BALES SHALL BE MAINTAINED OR REPLACED AS ORDERED BY THE ENGINEER UNTIL THEY ARE NO LONGER NECESSARY FOR THE PURPOSE INTENDED OR ARE ORDERED REMOVED BY THE ENGINEER. HAY BALES SHALL BE MADE OF HAY WITH 40 POUNDS MINIMUM WEIGHT AND 120 POUNDS MAXIMUM WEIGHT. WOOD STAKES SHALL BE A MINIMUM OF 1 INCH BY 1 INCH NOMINAL SIZE BY A MINIMUM OF 3 FEET LONG.

10. SILT FENCE: SHALL CONSIST OF 3-FOOT WIDE GEOSYNTHETIC FABRIC WITH PREFABRICATED WOOD POSTS AS MANUFACTURED BY "MIRAFI" OR EQUAL. THE BOTTOM SIX INCHES OF FABRIC SHALL BE BURIED BY EITHER TRENCHING OR BY LAYING THE SIX INCH SECTION HORIZONTALLY ON THE GROUND AND BURYING BY RAMPING THE TOPSOIL UP TO THE CONTROL FENCE.

- MINIMUM LENGTH OF SILT FENCE IS 15 L.F.
- MAXIMUM POST SPACING IS 10 L.F.
- JOINTS IN FILTER FABRIC SHALL BE ONLY AT SUPPORT POSTS WITH MINIMUM 6" OVERLAP, SECURELY SEALED
- SILT FENCE SHALL NOT BE USED IN A WATER COURSE
- FABRIC SUSCEPTIBLE TO SUNLIGHT DAMAGE SHALL NOT BE USED IN ANY INSTALLATIONS WHERE EXPOSURE TO LIGHT WILL EXCEED 30 DAYS, UNLESS SPECIFICALLY AUTHORIZED IN WRITING BY THE ENGINEER.

11. TEMPORARY SWALES AND SEDIMENTATION BASINS MAY BE CONSTRUCTED OF RIP-RAP, MULCH, HAY BALES OR JUTE MESH. PORTLAND CONCRETE OR BITUMINOUS CONCRETE WILL NOT BE ALLOWED.

12. TEMPORARY GRASS SEED SHALL BE PERENNIAL RYE-GRASS (LOLIUM PERENNE) OR AN IMPROVED VARIETY THEREOF, SUCH AS MANHATTAN, HAVING A MINIMUM PURITY OF 98 PERCENT AND A MINIMUM GERMINATION OF 90 PERCENT. THE SEEDING MAY BE ALTERED BY THE ENGINEER IF REQUESTED BY THE CONTRACTOR TO SUIT SPECIAL AREAS OR CONDITIONS.

13. AT THE COMPLETION OF THE PROJECT, AND AFTER ALL DISTURBED AREAS ARE STABILIZED, THE CONTRACTOR SHALL COMPLETELY REMOVE ALL SEDIMENTATION AND EROSION CONTROL MEASURES. SILT FENCING SHALL BE CUT FLUSH WITH THE GROUND AND ANY ACCUMULATED SEDIMENTATION SHALL BE THINLY SPREAD UPON EXISTING GROUND COVER. ALL MULCH, HAY BALES AND RIP-RAP SHALL BE REMOVED FROM THE SITE, UNLESS SPECIFICALLY ORDERED BY THE ENGINEER TO REMAIN IN PLACE.

GENERAL NOTES:

1. APPROXIMATE AREA TO BE DISTURBED = 1.1 AC., APPROXIMATE AREA TO BE VEGETATIVELY STABILIZED = 0.25 AC.

2. THE ANTICIPATED START OF CONSTRUCTION FOR THE PROJECT IS FALL 2016 AND THE APPROXIMATE END OF CONSTRUCTION IS SPRING 2017.

3. THE FOLLOWING PERMITS ARE ANTICIPATED FOR THE PROJECT: LOCAL PLANNING AND ZONING

4. CONTRACTOR SHALL ENSURE THAT ALL SEDIMENT AND EROSION CONTROL MEASURES AT THE SITE ARE MAINTAINED AND IN WORKING ORDER AT ALL TIMES BUT ESPECIALLY PRIOR TO A MAJOR STORM. A MAJOR STORM IS DEFINED AS A STORM PREDICTED BY THE NATIONAL OFFICE OF ATMOSPHERIC ADMINISTRATION (NOOA) WEATHER SERVICE WITH WARNINGS OF FLOODING, SEVERE THUNDERSTORMS OR SIMILARLY SEVERE WEATHER CONDITIONS OR EFFECTS.

5. ALL SEDIMENT AND EROSION CONTROL MEASURES TO BE USED AT THE SITE SHALL BE IN ACCORDANCE WITH THE 2002 CONNECTICUT GUIDELINES FOR SOIL EROSION AND SEDIMENT CONTROL.

6. PERSON RESPONSIBLE FOR MAINTENANCE OF SEDIMENT AND EROSION CONTROL MEASURES DURING CONSTRUCTION SHALL BE: TO BE DETERMINED.

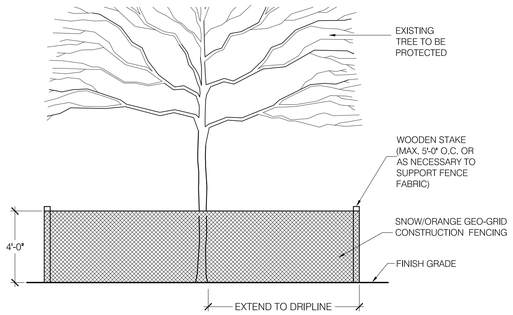

NOTES:
1. NO STOCKPILING OF MATERIALS OR EQUIPMENT IS PERMITTED WITHIN TREE PROTECTION FENCE.

2. EXTENT OF TREE PROTECTION FENCE SHALL BE TO DRIPLINE OF TREE WHERE POSSIBLE. FENCE MAY BE LOCATED A MIN. OF 8'-0" FROM TRUNK OF TREE WHERE APPROVED BY LANDSCAPE ARCHITECT.

3 TREE PROTECTION FENCE
SCALE: NTS

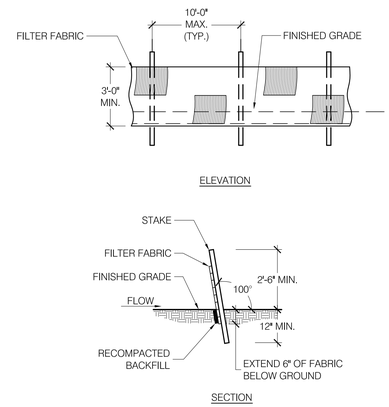

2 SILT FENCE DETAIL
SCALE: NTS

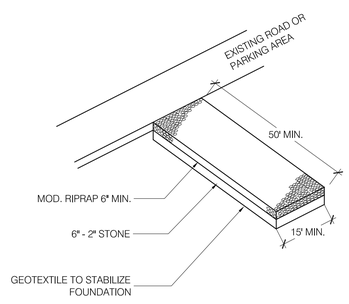

4 ANTI-TRACKING PAD DETAIL
SCALE: NTS

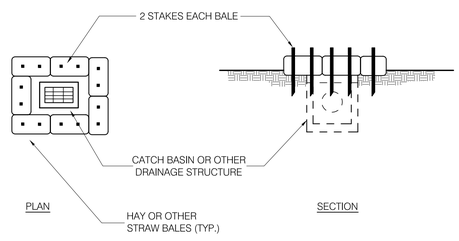

NOTE:
ALL EXISTING OR PROPOSED CATCH BASINS IN AREAS DISTURBED BY CONSTRUCTION SHALL BE PROTECTED BY SEDIMENTATION CONTROLS.

1 HAY BALE DETAIL- CATCH BASIN IN A DEPRESSION - TYPE 'C'
SCALE: NTS

Stantec

STANTEC Consulting Inc.
55 Church Street
Suite 601
New Haven, CT 06510
Tel: 203.495.1645 / Fax: 203.495.1652
www.stantec.com

Copyright Reserved

The Contractor shall verify and be responsible for all dimensions. DO NOT scale the drawing - any errors or omissions shall be reported to Stantec without delay.
The Copyrights to all designs and drawings are the property of Stantec. Reproduction or use for any purpose other than that authorized by Stantec is forbidden.

Consultants

Seals

Notes

Revision	By	Appd	YYYY.MM.DD

BID DOCUMENTS Issued	PSC By	TAH Appd	2016.08.17 YYYY.MM.DD

Permit-Seal

Client/Project
Eichler's Cove Marina Parking Expansion and Improvements
Newtown, CT

Title
SEDIMENT AND EROSION CONTROL DETAILS

Project No. 192310611
Scale AS NOTED
Revision
Drawing No. S-06

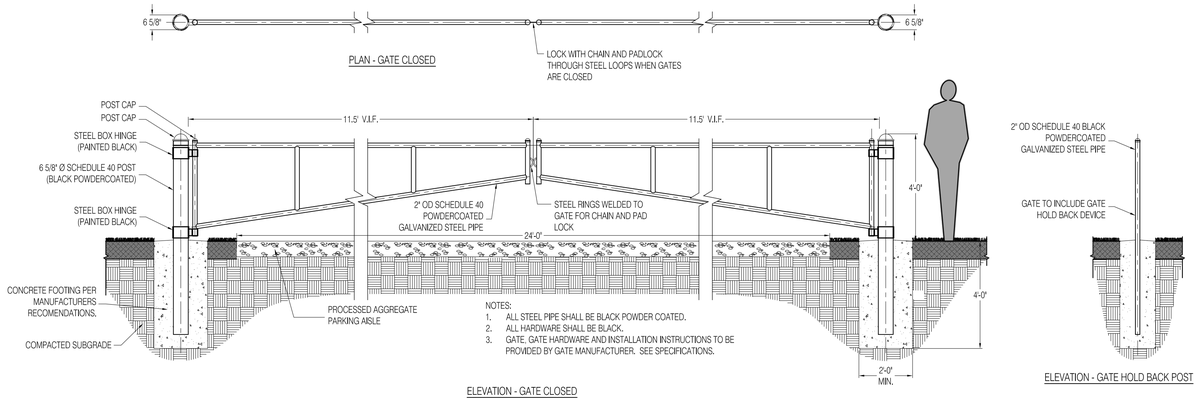

NOTES:
1. ALL STEEL PIPE SHALL BE BLACK POWDER COATED.
2. ALL HARDWARE SHALL BE BLACK.
3. GATE, GATE HARDWARE AND INSTALLATION INSTRUCTIONS TO BE PROVIDED BY GATE MANUFACTURER. SEE SPECIFICATIONS.

14 SWING GATE AT BOAT LAUNCH - (DEDUCT ALTERNATE #1)
SCALE: N.T.S.

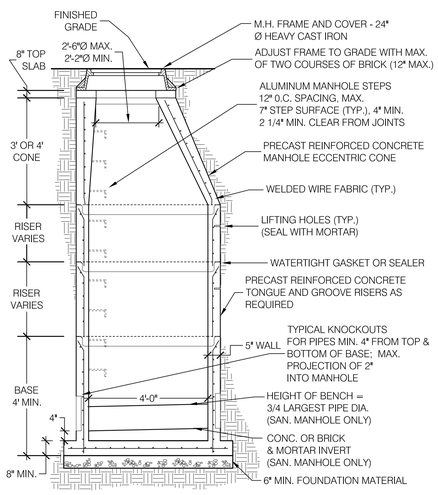

13 TYPICAL STORM DRAIN & SANITARY SEWER MANHOLE
SCALE: N.T.S.

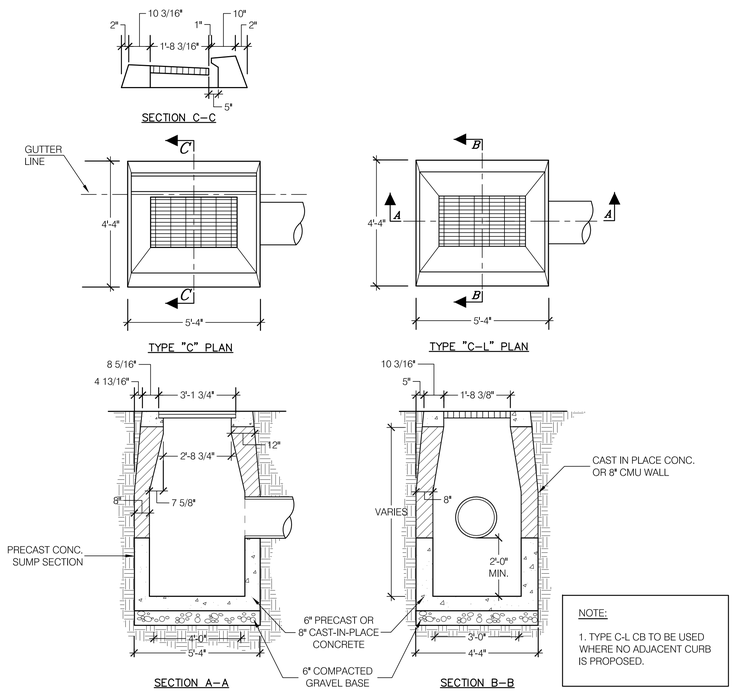

NOTE:
1. TYPE C-L CB TO BE USED WHERE NO ADJACENT CURB IS PROPOSED.

11 TYPICAL CATCH BASIN
SCALE: N.T.S.

6 HANDICAPPED PARKING SYMBOL
SCALE: N.T.S.

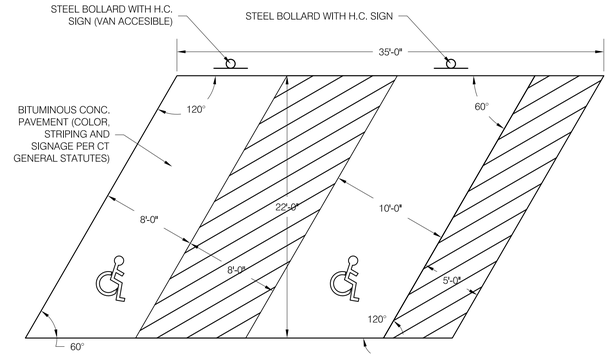

5 HANDICAPPED PARKING STALL
SCALE: N.T.S.

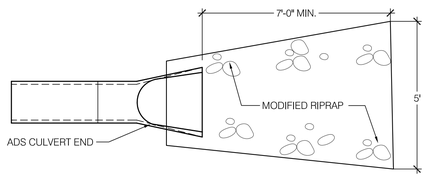

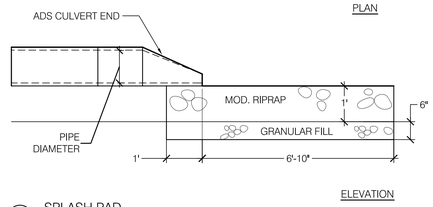

9 SPLASH PAD
SCALE: N.T.S.

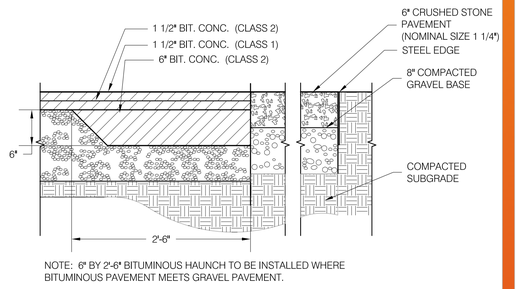

NOTE: 6" BY 2'-6" BITUMINOUS HAUNCH TO BE INSTALLED WHERE BITUMINOUS PAVEMENT MEETS GRAVEL PAVEMENT.

4 ASPHALT HAUNCH FOR PAVEMENT MEETING GRAVEL
SCALE: 1/2" = 1'-0"

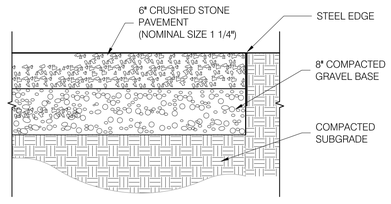

3 GRAVEL PAVEMENT FOR PARKING LOT
SCALE: 1" = 1'-0"

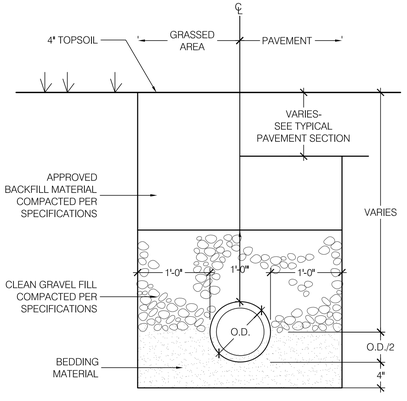

12 TYPICAL STORM TRENCH SECTION
SCALE: 1" = 1'-0"

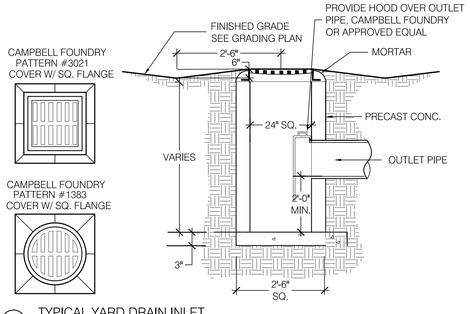

10 TYPICAL YARD DRAIN INLET
SCALE: N.T.S.

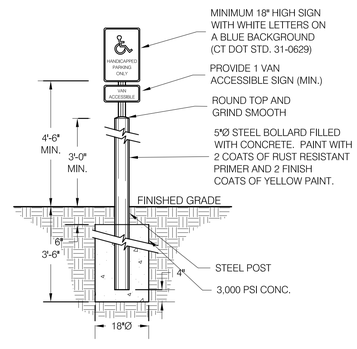

8 STEEL BOLLARD (SHOWN W/ H.C. PARKING SIGN)
SCALE: 1/2" = 1'-0"

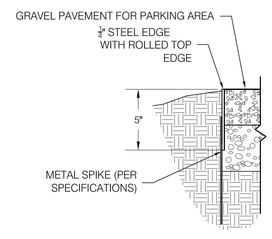

7 STEEL EDGING
SCALE: NTS

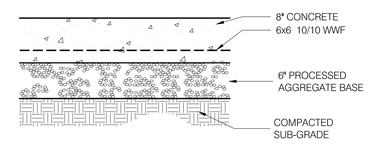

2 HEAVY DUTY CONCRETE PAVEMENT
SCALE: 1" = 1'-0"

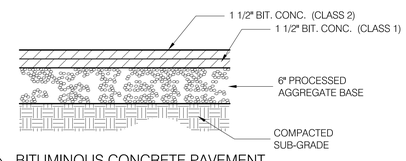

1 BITUMINOUS CONCRETE PAVEMENT
SCALE: 1" = 1'-0"

Stantec

STANTEC Consulting Inc.
55 Church Street
Suite 601
New Haven, CT 06510
Tel: 203.495.1645 / Fax: 203.495.1652
www.stantec.com

Copyright Reserved

The Contractor shall verify and be responsible for all dimensions. DO NOT scale the drawing - any errors or omissions shall be reported to Stantec without delay.
The Copyrights to all designs and drawings are the property of Stantec. Reproduction or use for any purpose other than that authorized by Stantec is forbidden.

Consultants

Seals

Notes

Revision	By	Appd	YYYY.MM.DD

BID DOCUMENTS	PSC	TAH	2016.08.17
Issued	By	Appd	YYYY.MM.DD

Permit-Seal

Client/Project
Eichler's Cove Marina Parking Expansion and Improvements
Newtown, CT

Title
SITE DETAILS - 01

Project No. 192310611
Scale AS NOTED
Revision
Drawing No. S-07

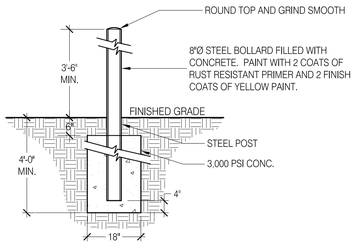

9 8" STEEL BOLLARD
SCALE: 1" = 1'-0"

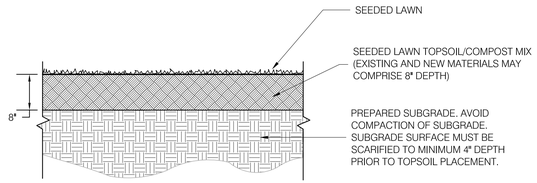

8 SEEDED LAWN
SCALE: 1" = 1'-0"

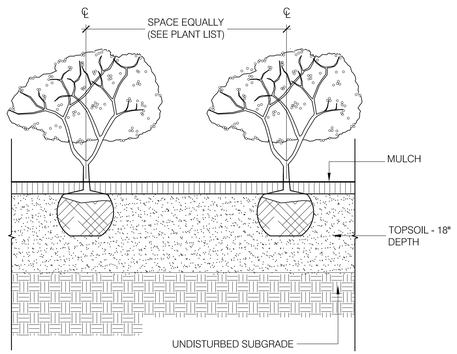

NOTE: PLANTS ARE TO BE SPACED EQUIDISTANT FROM EACH OTHER

7 SHRUB PLANTING - (DEDUCT ALTERNATE #2)
SCALE: N.T.S.

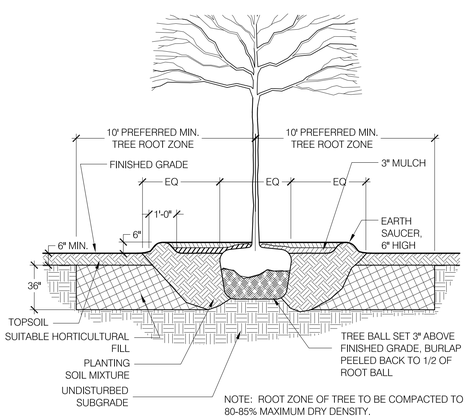

6 TREE PLANTING - (DEDUCT ALTERNATE #2)
SCALE: N.T.S.

41" SERIES BLOCKS

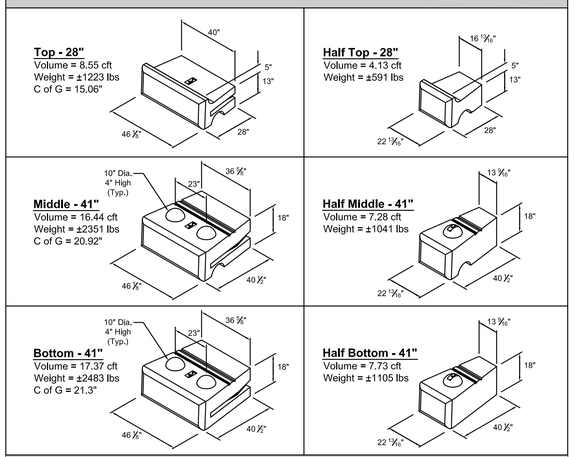

60" BLOCKS

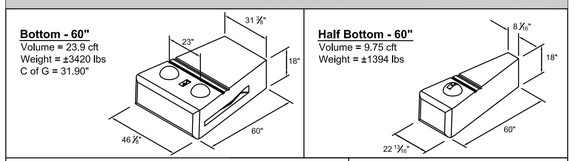

NOTES:
Volume and Center of Gravity (C of G) calculations are based on the blocks as shown.
Center of Gravity is measured from the back of the block.
Half blocks may include a fork lift slot on one side.
Actual weights and volumes may vary.
Weight shown is based on 143 pcf concrete.

Redi-Rock International, LLC

NOTES:
1. ALL WALLS ON THE SITE SHALL BE BASED UPON THE 41" SERIES BLOCKS AS MANUFACTURED BY REDI-ROCK. THE 60" SERIES BLOCKS MAY BE USED FOR THE "BOTTOM BLOCKS" ON WALLS REACHING TALLER SPECIFIC HEIGHTS AS NOTED BY MANUFACTURER.
2. ALL WALLS SHALL USE COMBINIATIONS OF THE ABOVE BLOCKS TO CREATE THE WALLS AS SHOWN ON THE PLANS AND AS DESIGNED BY THE MANUFACTURER.

5 TYPICAL BLOCK DETAILS
SCALE: N.T.S.

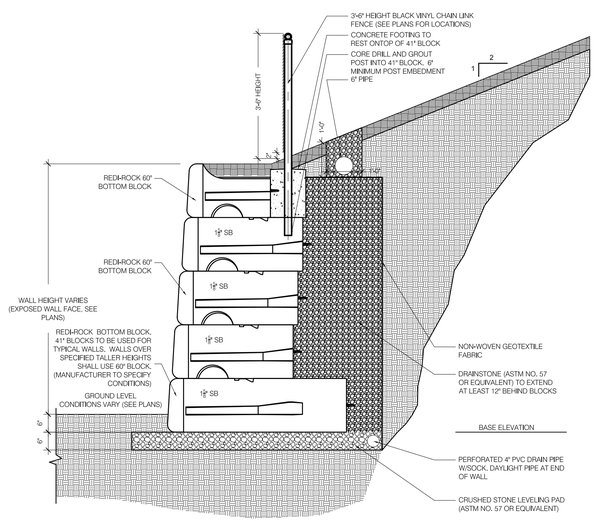

NOTES:
1. THIS SECTION SHOWS A TYPICAL SECTION ONLY. THE ACTUAL DESIGN MAY VARY FROM WHAT IS SHOWN. THE FINAL DESIGN AND SHOP DRAWING SUBMISSION SHALL BE PROVIDED BY THE MANUFACTURER, AND BE SIGNED AND SEALED BY A LICENSED PROFESSIONAL ENGINEER IN THE STATE OF CT.
2. CONTRACTOR IS RESPONSIBLE FOR ASSESMENT OF ALL EXISTING CONDITIONS INCLUDING SOIL BORING INFORMATION PERTINENT TO THE DESIGN OF THE RETAINING WALLS.
3. THE STYLE OF REDI-ROCK BLOCKS SHALL BE COBBLESTONE AND SHALL MATCH EXISTING WALLS ON SITE IN COLOR AND APPEARANCE.
4. WALLS SHALL BE STEPPED WHERE APPROPRIATE AS GRADES VARY IN HEIGHT TO ACHIEVE THE MOST EFFICIENT WALL HEIGHTS AS POSSIBLE.

4 TYPICAL RETAINING WALL SECTION
SCALE: 1/2" = 1'-0"

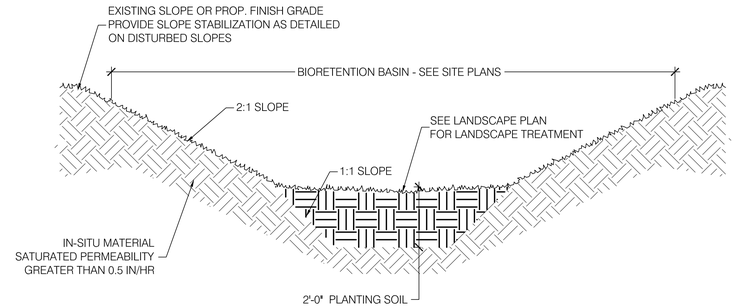

3 TYPICAL BIORETENTION AREA
SCALE: N.T.S.

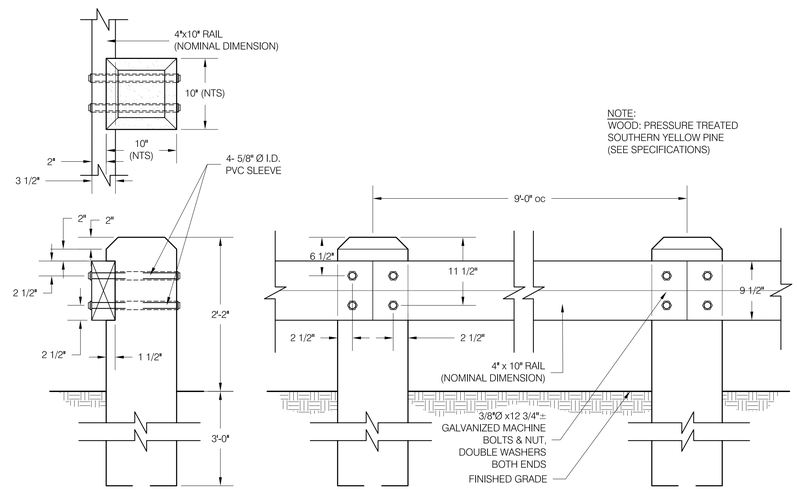

2 TIMBER POST GUIDE RAIL
SCALE: 1" = 1'-0"

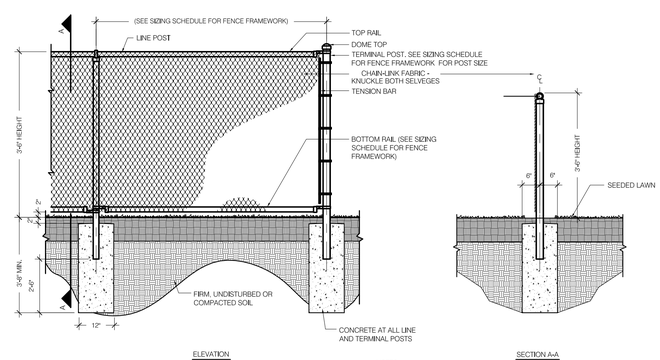

NOTES:
1. ALL FENCE COMPONENTS TO BE BLACK POWDER COATED.
2. ALL HARDWARE USED SHALL BE CLOSED ENDED (RAILS AND END CAPS).

SIZING SCHEDULE FOR FENCE FRAMEWORK

HEIGHT OF FENCE	DIAMETER OF LINE POSTS	POST SPACING MAXIMUM	CORNER AND END POST	TOP RAIL	MID RAILS	BOTTOM RAIL	DEPTH OF POST INTO CURB AND FOOTING AT:		HORIZONTAL BRACES AT CORNER & END POST	DIAGONAL BRACES
							LINE POST	END/CORNER/ GATE POST		
3'-6"	2"	6'-0"	2 1/2"	1 5/8"	0	1 5/8"	1'-0"	1'-0"	0	0

END & CORNER POST TOP	TOP & BOTTOM FABRIC SELVAGE
DOME	KNUCKLE
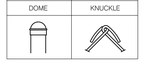	

1 3'-6" CHAIN LINK FENCE
SCALE: N.T.S.

Stantec
STANTEC Consulting Inc.
55 Church Street
Suite 601
New Haven, CT 06510
Tel: 203.495.1645 / Fax: 203.495.1652
www.stantec.com

Copyright Reserved
The Contractor shall verify and be responsible for all dimensions. DO NOT scale the drawing - any errors or omissions shall be reported to Stantec without delay.
The Copyrights to all designs and drawings are the property of Stantec. Reproduction or use for any purpose other than that authorized by Stantec is forbidden.

Consultants

Seals

Notes

Revision	By	Appd	YYYY.MM.DD

BID DOCUMENTS	PSC	TAH	2016.08.17
Issued	By	Appd	YYYY.MM.DD

Permit-Seal

Client/Project
Eichler's Cove Marina Parking Expansion and Improvements
Newtown, CT

Title
SITE DETAILS - 02

Project No. 192310611
Scale AS NOTED
Revision
Drawing No. S-08

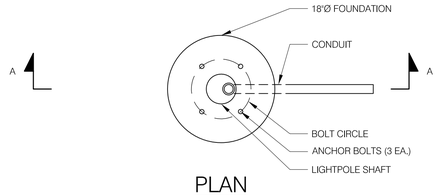

PLAN

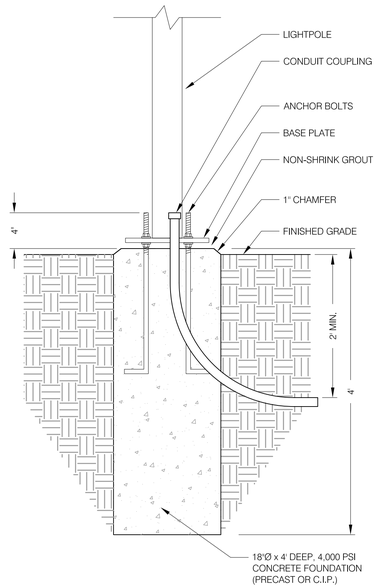

SECTION A-A

NOTES:

1. NUMBER, SIZE AND LOCATION OF ANCHOR BOLTS SHALL BE AS PER MANUFACTURERS RECOMMENDATIONS.
2. INSTALL TEE DRAINS IN RACEWAY WHEN REQUIRED BY ENGINEER.
3. SEE LIGHTPOLE DETAIL FOR ADDITIONAL INFORMATION.
4. LIGHT POLE SHAFT, BASE PLATE AND ANCHOR BOLTS SHALL BE PER POLE MANUFACTURER SPECIFICATIONS.

4 LIGHT POLE FOOTING (DEDUCT ALTERNATE #3)
SCALE: N.T.S.

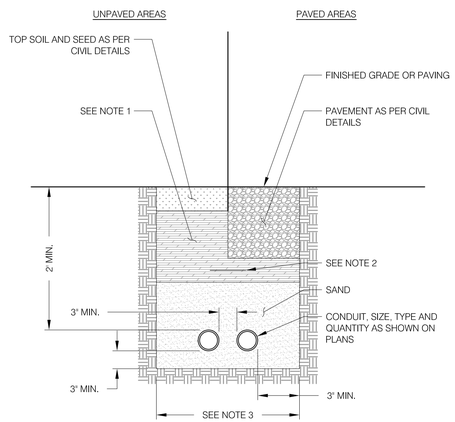

NOTES:

1. APPROVED COMPACTED BACKFILL (95% PROCTOR AS PER ASTM D1557 IN 6" LIFTS).
2. METALLIC TAPE BURIED 10" ABOVE CONDUITS. WHEN CONDUIT IS MORE THAN TWO ACROSS ADD A SECOND LINE OF TAPE.
3. TRENCH WIDTH SHALL BE 1' MINIMUM.

6 CONDUIT TRENCH DETAIL
SCALE: N.T.S.

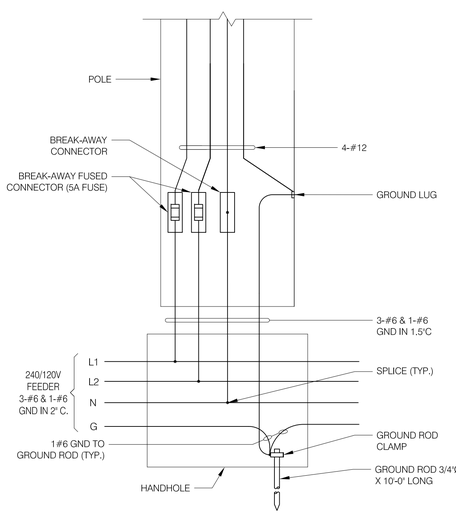

TYPICAL LIGHTPOLE WIRING DIAGRAM - BOX TO POLE (DEDUCT ALTERNATE #4)

5 SCALE: N.T.S.

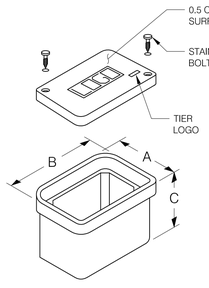

SIZE	A	B	C
11'x18'	13⅜"	20¼"	30°

NOTES:

1. THE HANDHOLE AND COVER SHALL BE CONSTRUCTED OF PRECAST POLYMER CONCRETE AND SHALL BE UL LISTED TO MEET ANSI 77, TIER 8.
2. THE LOGO SHALL READ "ELECTRICAL" FOR ALL HANDHOLES.
3. INSTALL A COPPER-CLAD STEEL GROUND ROD (3/4"Ø x 10'-0" LONG) WITHIN EACH HANDHOLE. INSTALL GROUNDING AS PER NEC.
4. THE HANDHOLE MAY REQUIRE TWO STACKABLE PIECES TO ATTAIN 30" DEPTH
5. HANDHOLE SHALL SIT ON 1' DEEP BED OF GRAVEL EXTENDING 6" BEYOND DIMENSIONS OF JUNCTION BOX. USE FILTER MATERIAL TO SEPARATE GRAVEL FROM EARTH.
6. ALL EMPTY CONDUIT SHALL BE CAPPED AND SEALED WITH A NYLON PULL CORD.

3 POLYMER CONCRETE HANDHOLE DETAIL
SCALE: N.T.S.

NOTES

1. POLE AND LUMINAIRE SHALL BE PER THE MANUFACTURER AND MODEL NUMBERS LISTED IN THE PLANS, OR APPROVED EQUAL. SUBMIT PRODUCT CUTSHEETS TO LANDSCAPE ARCHITECT FOR REVIEW.

PS5R
Round Steel Poles

Product Description
Non-tapered round steel poles are supplied with welded base with cover, four galvanized anchor bolts, masonite mounting template. Each anchor bolt is provided with two washers and two nuts. Steel pole base has slotted holes. Per National Electrical Code requirements, pole is standard with a 2" x 6" (51 X 152mm) hand hole, located 12" (305mm) above the bottom of the pole base. A #10-32 stainless-steel weld stud is located inside pole, opposite hand hole; a hand hole cover is supplied but shipped separately. Consult factory for EPA ratings.

Construction & Materials
- Round, non tapered pole of structural steel tubing (ASTM A 500) with a minimum yield of 42,000 p.s.i
- Welded to a formed carbon steel base plate with a minimum yield strength of 36,000 p.s.i
- Exclusive DeltaGuard® finish features an E-Coat epoxy primer with an ultra-durable powder topcoat, providing excellent resistance to corrosion, ultraviolet degradation and abrasion. Finish covered by our 7 year limited warranty

Regulatory & Voluntary Qualifications
- UL Listed in US for electrical ground bonding

Patents
- Visit webs.to for patents that cover these products.

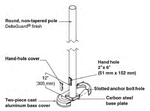

Field Installed Accessories
REC-GFIS46ABZ
REC-GFIS46ABK
REC-GFIS46AWH
REC-GFIS46APB
REC-GFIS46ASV
GFI Outlet Accessory - 120V

Ordering Information

Catalog Number	Height (ft) x Diameter (in) x Wall (in)	80 MPH Wind		90 MPH Wind		100 MPH Wind		110 MPH Wind		120 MPH Wind		130 MPH Wind	
	Height (ft) x Diameter (in) x Wall (in)	Weight (lbs)	Fixture Weight	Weight (lbs)	Fixture Weight	Weight (lbs)	Fixture Weight	Weight (lbs)	Fixture Weight	Weight (lbs)	Fixture Weight	Weight (lbs)	Fixture Weight
PSR10C5x065	12 x 5 x 0.123	8.7 x 127 x 3	29.5	200	23.1	200	18.9	200	14.1	200	11.5	160	9.7
PSR10C5x110	11 x 5 x 0.123	4.8 x 127 x 3	25.5	200	19.9	200	16.5	200	12.1	200	9.8	160	8.3
PSR10C5x250	17 x 5 x 0.123	5.2 x 127 x 3	22.8	200	17.7	200	15.8	200	10.7	200	8.6	160	7.3
PSR10C5x300	20 x 5 x 0.123	5.5 x 127 x 3	19.3	200	14.1	200	11.2	200	9.1	200	6.9	160	5.9
PSR12C5x065	22 x 5 x 0.123	16.3 x 127 x 3	16.3	200	12.4	200	9.5	160	7.3	160	5.8	160	4.8
PSR12C5x110	25 x 5 x 0.123	7.6 x 127 x 3	12.2	200	9.2	200	6.9	160	5.2	160	4.1	120	3.3
PSR12C5x250	27 x 5 x 0.123	8.2 x 127 x 3	10.3	200	7.8	200	5.8	160	4.3	160	3.3	120	2.7
PSR12C5x300	30 x 5 x 0.123	10 x 127 x 3	7.9	200	5.6	200	4.0	160	2.9	160	2.2	120	1.7

(4) Specify direct mount pole configuration

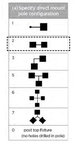

(5) Specify finish color

BK Black
BZ Bronze
BLK Black
WH White
PB Platinum Bronze
SV Silver

Brackets and Tenons

Product Specifications

FINISH
- Exclusive ColorFast DeltaGuard® finish features an E-Coat epoxy primer with an ultra-durable powder topcoat, providing excellent resistance to corrosion, ultraviolet degradation and abrasion. Black, bronze, silver and white are available

LIMITED WARRANTY®
- 7 years on tenons/7 years on ColorFast DeltaGuard® finish

PB Series

Square Internal Mount Vertical Steel Tenons (for use with Adjustable Arm & Horizontal/Vertical Tenon Mounts)

The square base of the PB Series steel brackets is designed to be inserted into square, non-tapered steel or aluminum poles ranging in size from 2" (76mm) to 6" (152mm) square with a maximum wall thickness of 0.188" (5mm). Square PB tenons are supplied with end caps to enclose the wiring chamber. Tenon base secures to pole with four 5/16" (8mm) hex head stainless steel black oxide bolts. Vertical tenons measure 2-3/8" (60mm) O.D. x 3.75" (95mm) tall and are made of steel tubing. Luminaires mounted to these tenons can be adjusted both vertically and horizontally.

PB	-				
Product	-	Mounting Configurations	Pole Size (O.D.)	Color Options	
PB	-	1A Single 2A 180° Twin 3A 180° Triple 4A(90) 90° Quad Available for 4" & 6" pole only 4A(180) 180° Quad Available for 4" & 6" pole only	2 2" (50mm) 3 3" (76mm) 4 4" (102mm) 6 6" (152mm)	BK Black BZ Bronze GY Gray WH White	

Round External Mount Vertical Tenons (for use with Adjustable Arm & Horizontal/Vertical Tenon Mounts)

The round base of the PB Series steel brackets is designed to mount over a steel or aluminum 2-3/8" (60mm) O.D. round pole or tenon. All are supplied with end caps to enclose the wiring chamber. Tenon base secures to pole with eight stainless steel allen head screws. Vertical tenons measure 2-3/8" (60mm) O.D. x 3.75" (95mm) tall and are made of steel tubing. Luminaires mounted to these tenons can be adjusted both vertically and horizontally.

PB	-				
Product	-	Mounting Configurations	Pole Size (O.D.)	Color Options	
PB	-	2A 180° Twin 3A 180° Triple 4A 180° Quad	2.375 2.375" (60mm) Consult factory for other pole sizes	BK Black BZ Bronze GY Gray WH White	

2 PARKING LOT LIGHT POLE - DEDUCT ALTERNATE #3
SCALE: N.T.S.

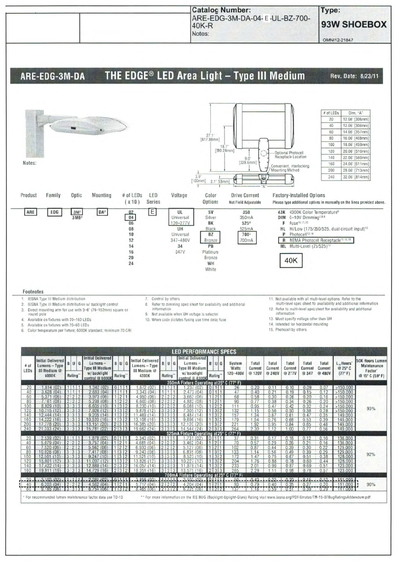

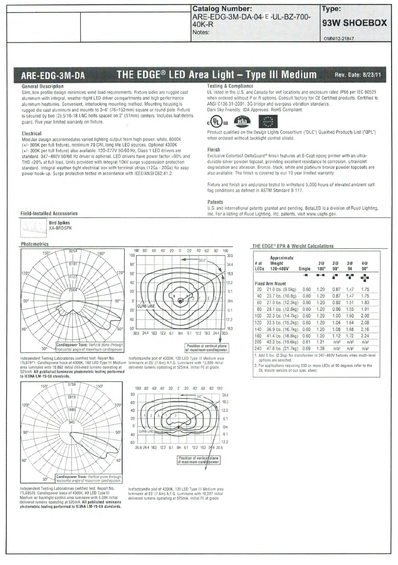

1 PARKING LOT LIGHT FIXTURE - DEDUCT ALTERNATE #4
SCALE: N.T.S.

Stantec

STANTEC Consulting Inc.
55 Church Street
Suite 601
New Haven, CT 06510
Tel: 203.495.1645 / Fax: 203.495.1652
www.stantec.com

Copyright Reserved

The Contractor shall verify and be responsible for all dimensions. DO NOT scale the drawing - any errors or omissions shall be reported to Stantec without delay.
The Copyrights to all designs and drawings are the property of Stantec. Reproduction or use for any purpose other than that authorized by Stantec is forbidden.

Consultants

Seals

Notes

Revision	By	Appd	YYYY.MM.DD

BID DOCUMENTS	PSC	TAH	2016.08.17
Issued	By	Appd	YYYY.MM.DD

Permit-Seal

Client/Project

Eichler's Cove Marina Parking Expansion and Improvements

Newtown, CT

Title

ELECTRICAL DETAILS

Project No. 192310611

Scale AS NOTED

Revision

Drawing No. S-09

Single-Phase DB in Conduit

SCOPE - This Standard covers the general requirements for electric utility installation of single-phase direct-buried cables in conduit.

GENERAL - The preferred method of providing electrical service is installation of direct-buried electrical cables in conduit. All installations of electrical cables in conduit shall adhere to the 1997 NESC (National Electrical Safety Code), in addition to the following requirements:

1. **TRENCH** - Trench location shall be in as direct a line as possible without reverse bends between distribution facilities and from the distribution facility to the customer service entrance. In order to minimize cable pulling forces, no more than two bends (not including riser at house or pole) exceeding a total change of 45 degrees shall be permitted.

   a. The trench bottom shall be undisturbed or relatively smooth earth, well tamped, and free of any debris that may be detrimental to the conduit. Excavation shall be of a size and extent to permit proper installation of conduit and structures as required.

      1) Where excavation is in rock, it shall be removed to 4 inches below the trench bottom. The over excavation shall be replaced with a bedding of gravel, sand or clean, well tamped backfill.

      2) Backfill shall not contain ashes, cinders, shells, frozen material, loose debris, or stones larger than 2 inches in maximum dimension. Backfill shall be compacted.

   b. Conduit in the trench should have a 4 inch per 100 feet downward pitch toward the distribution facility, if physically possible. (This provides drainage away from service entrance, prevents stagnant water in duct.)

   c. Trench shall be of such depth to accommodate 30 inches minimum cover for primary and secondary cables in conduit installed along the roadway easement, and 24 inches minimum cover for secondary or service cables in conduit on private property.

2. **CONDUIT** - Standard conduit shall be minimum 3-inch diameter, rigid PVC, heavy wall, sunlight resistant (6%-7% titanium dioxide by weight), Schedule 40 as per NEMA TC2-1990.

   a. Limit the number of electric utility conduits to a maximum of four per trench.

   b. Install conduit, with all joints cemented, through knockout and extend 4 inches inside handhole. Terminate conduit run with end bell (e.g., **SC 0177110** for 3-inch diameter). Conduit destination shall be permanently marked on conduit end.

   c. Gaps around conduit at knockout openings shall be sealed with cement mortar to prevent backfill entering the handhole.

   d. A 1/4-inch-diameter nylon pull line shall be installed in each duct, including 10 feet of slack, and secured to conduit plug. Each end of the conduit shall be sealed with a conduit plug (e.g., **SC 0175141** for 3-inch diameter), and left accessible.

   e. Bends in the conduit run shall have a minimum radius of 48 inches. This requirement does not include bends used at house or pole risers where the bend radius shall be a minimum of 24 inches, with 36 inches preferred.

3. **PRIMARIES** - For primary in conduit, a separate bare copper grounded neutral conductor and anodes are not required.

   a. Install primary in conduit at a minimum depth of 30 inches below finished grade.

Single-Phase DB in Conduit

   b. Because of grounding requirements, each section of primary in conduit is limited to a maximum of 750 feet when other utilities are in the trench. When the electric utility is sole occupant in the trench, each section of primary in conduit is limited to a maximum length of 1700 feet. (Note: Length may be limited to 1000 feet if district utilizes 1000-foot emergency primary reel trailer.)

   c. The Company reserves the right to limit runs where cable pulling forces exceed recommended maximums.

4. **SECONDARIES and SERVICES** - The Company reserves the right to limit services in conduit which require a cable installation pulling force in excess of 2000 pounds.

   a. Conduit for secondaries and services on private property shall be installed at a minimum depth of 24 inches below finished grade.

   b. Secondaries or services in conduit, installed in the same trench as primaries or on public right-of-way, shall be at a minimum depth of 30 inches below finished grade.

   c. A clearance zone of 4' wide x 3' deep x 6' high is required at the customer end of the service. Keep shrubs, debris, fences, and other structures clear of this area. (Refer to sketch at right.)

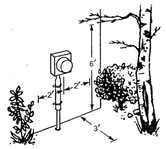

5. **GROUNDING** - Primaries shall be grounded at all handholes, structures and enclosures.

   a. The grounding interval for primaries in the trench with other utilities shall be not less than eight per mile.

   b. For primaries with sole occupancy in the trench, the grounding interval shall be not less than four per mile.

6. **OTHER UTILITIES** - Conduit, terminal enclosures, or structures belonging to other utilities shall be located such as to not interfere with electrical installations nor impede the operation and maintenance of electrical facilities.

   a. The acceptable zone for installation of above-ground facilities belonging to other utilities is as shown below.

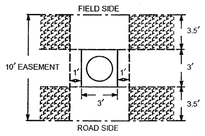

LEGEND:
- Electric Company Pad or Vault
- Acceptable Zone for Installation of Above-Ground Facilities Belonging to Other Utilities

   b. No shrubs, fences, or permanent structures can be placed within 10 feet of the front and 3 feet of the sides and back of pad-mounted transformers. The Company has the right to remove these obstructions without notice to the owner. For additional clearances see **DTR 42.047** and **DTR 42.061**.

SCOPE – All direct–buried primary cables shall be of the jacketed type. The cables may be random–laid with the secondaries and other utilities under certain conditions, detailed in **DTR 44.101**.

INSTALLATION IN TRENCH – All direct–buried cables shall be installed at a depth of at least 30 inches in the following order:

1. Ensure that the bottom of the trench is well–tamped and free of rocks.
2. Install the conduit, gluing all couplings.
3. Install secondaries and other utility cables or conduits in the trench.
4. Backfill with 12 inches clean fill not to contain stones larger than 2 inches in maximum diameter.
5. Install cable warning tape 12 inches over the conduit.
6. Fill in the remainder of the trench with native backfill.
7. Install pull line, including 10 feet of slack, and secure to conduit plug at each end of conduit run.

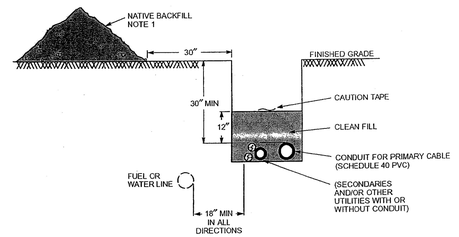

CROSS SECTION OF JOINT TRENCH

Notes

1. The trench shall be backfilled immediately following placement of the conduit.
2. 1/4–inch–diameter nylon pull line and plastic conduit plugs to be supplied and installed by contractor.

ORIGINAL 6/24/98	SINGLE–PHASE PRIMARY CABLE INSTALLATION DIRECT–BURIED – IN CONDUIT			CT/MA
APPROVED 12/18/00	NORTHEAST UTILITIES	CONSTRUCTION STANDARD	DTR 50.103	3

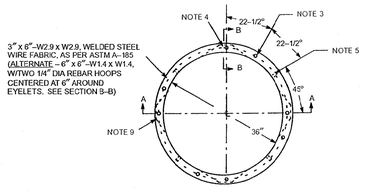

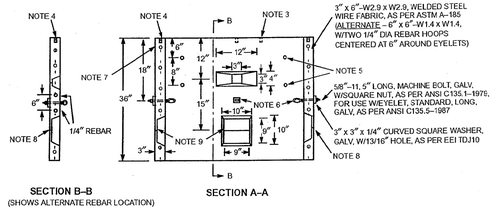

SECTION B–B
(SHOWS ALTERNATE REBAR LOCATION)

SECTION A–A

Notes

1. Concrete and concrete design shall be in accordance with ACI 318–1995.
2. Concrete strength 5000 psi at 28 days. Air entrainment 6 to 8 percent.
3. Four zinc alloy inserts 3/8" – 16 x 1–3/8" equally spaced on 38–1/2" bolt circle.
4. Four zinc alloy inserts 5/8" – 11 x 1–11/16" equally spaced on 38–1/2" bolt circle.
5. Eight zinc alloy inserts 3/8" – 16 x 1–3/8".
6. Four eyelets, for use as pulling points, shall be installed adjacent to and centered above knockouts as shown.
7. Manufacturer's identification and month/year when manufactured shall be legibly marked in/on concrete on the outside upper part.
8. Location of each knockout shall be identifiable from exterior of handhole by providing a 3" diameter circle imprinted 1/4" deep into the concrete. Center of the imprinted circle shall be located at center of each knockout.
9. All knockouts shall have a web thickness not to exceed 3/4" ±1/8". Knockouts to be free of reinforcement.
10. The two recesses 12" from top are for use with adjustable lifter tool only.
11. Eyelets and zinc alloy inserts not to be used for lifting.

ORIGINAL 5/13/96	HANDHOLE – ROUND – PRECAST CONCRETE 36" DIAMETER x 36" HIGH			
APPROVED 6/5/00	NORTHEAST UTILITIES	MATERIAL SPECIFICATION	SPC H–020	6

ML 1245 D

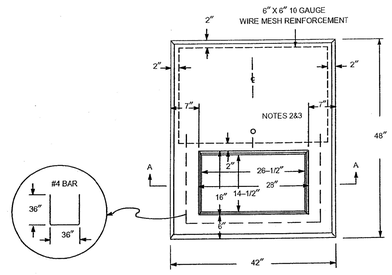

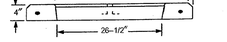

SECTION A–A

NOTES

1. Final 28 day concrete strength to be 5000 psi.
2. A 3/4 inch coil loop insert (Dayton F63) with an insert locator plug (Dayton T21) for lifting the pad at the center of gravity with a swivel plate.
3. Manufacturer's identification and month/year when manufactured shall be legibly marked in/on concrete in the top near the center.
4. Concrete and concrete design shall be in accordance with ACI 318–1986.

ORIGINAL 4/23/70	PAD – PRECAST CONCRETE – TRANSFORMER 167 KVA MAXIMUM – 42" X 48" X 4"			
APPROVED 8/1/91	NORTHEAST UTILITIES	MATERIAL SPECIFICATION	SPC P–009	11

ML 145 D

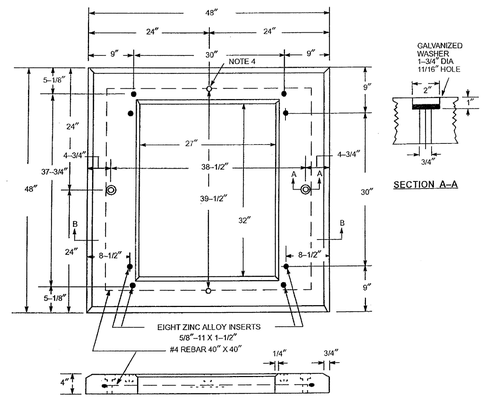

SECTION A–A

SECTION B–B

NOTES

1. Final 28 day concrete strength to be 5000 psi.
2. Manufacturer's identification and month/year when manufactured shall be legibly marked in/on concrete in the top within 4 inches of the opening.
3. Concrete and concrete design shall be in accordance with ACI 318–1986.
4. Two 3/4 inch coil loop inserts (Dayton F63) with an insert locator plug (Dayton T21) for lifting the pad with a swivel plate.

ORIGINAL 2/17/76	PAD – ENCLOSURE – PRECAST CONCRETE 48" X 48" X 4"			
APPROVED 11/1/94	NORTHEAST UTILITIES	MATERIAL SPECIFICATION	SPC P–017	9

1 EVERSOURCE STANDARD SPECIFICATIONS AND DETAILS
SCALE: N.T.S.

Stantec

STANTEC Consulting Inc.
55 Church Street
Suite 601
New Haven, CT 06510
Tel: 203.495.1645 / Fax: 203.495.1652
www.stantec.com

Copyright Reserved

The Contractor shall verify and be responsible for all dimensions. DO NOT scale the drawing - any errors or omissions shall be reported to Stantec without delay.
The Copyrights to all designs and drawings are the property of Stantec. Reproduction or use for any purpose other than that authorized by Stantec is forbidden.

Consultants

Seals

Notes

Revision	By	Appd	YYYY.MM.DD
BID DOCUMENTS	PSC	TAH	2016.08.17
Issued	By	Appd	YYYY.MM.DD

Permit-Seal

Client/Project
Eichler's Cove Marina
Parking Expansion and
Improvements
Newtown, CT

Title
EVERSOURCE STANDARD ELECTRICAL DETAILS - 01

Project No. 192310611
Scale AS NOTED
Revision
Drawing No. S-10

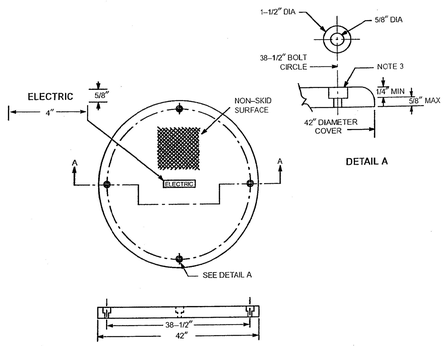

Notes

1. Cover shall conform to ASTM D790.
2. DESIGN LOADING shall be 4,500 pounds applied at the center of the cover over a 6" X 6" area. The cover will be supported by a 36–inch ID ring. The total deflection of the cover shall not exceed 4 inches with load applied for 5 minutes.
3. Plywood core designs shall be encapsulated in a fiberglass–reinforced polyester laminate a minimum of 1/8 inch thick on all surfaces, consisting of a spray up of chopped glass and resin totaling 5 ounces per square foot of surface. The glass content will be a minimum of 25 percent on the top, and will be increased on the bottom if necessary to meet the design loading specified in NOTE 1. The plywood core will comply with the American Plywood Association Standard PS 1–1974, DFPA GRADE, GROUP 1, EXTERIOR C–C or better.
4. The cover shall be permanently embossed with both manufacturer's name and the word "ELECTRIC" as shown.
5. The resin and the gel coat will be pigmented dark green, and there shall be no exposed glass on any surface.
6. A stainless steel or brass washer, 1–3/8 inch OD with a 5/8–inch hole, will be epoxied into the pentahead recess. There should be no exposed wood in the recess.

ORIGINAL 5/13/86	COVER – HANDHOLE – HEXAGONS AND ROUND 42–INCH DIAMETER			
APPROVED 5/14/97	NORTHEAST UTILITIES	MATERIAL SPECIFICATION	SPC C–710	3

1/2" : 1'

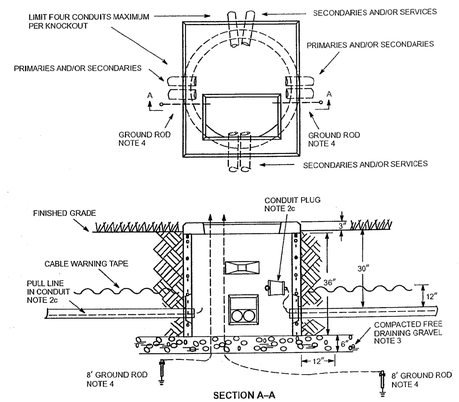

Notes

1. Install 42" x 48" x 4" pad, **SPC P–009** and 36" D x 36" H round handhole, **SPC H–020**.
2. Install conduit, with all joints cemented, through knockout to 4 inches inside handhole. Terminate conduit run with end bell (e.g., **SC 0177110** for 3–inch diameter). Conduit destination to be permanently marked on conduit end. Conduit shall be minimum 3–inch–diameter, Schedule 40 PVC. Limit four 4–inch–diameter conduits per knockout.
   a. Primaries and secondaries in conduit to be installed at 30 inches below grade.
   b. Services in conduit to be installed at 24 inches below grade.
   c. Install a 1/4–inch–diameter nylon pull line in each duct, including 10 feet of slack, and secure to conduit plug (e.g., **SC 0175141** for 3–inch–diameter). Plugged duct to be left accessible.
   d. Gaps around conduit at knockout openings shall be sealed with cement mortar to prevent backfill from entering handhole.
3. Install on virgin or well tamped gravel. Where poor soil exists, excavate to 6 inches below bottom of handhole and backfill with compacted clean gravel, free of foreign matter and debris, extending 12 inches past edge of structure. Remaining backfill shall not contain ashes, frozen material, debris, or stones larger than 2 inches in maximum dimension.
4. Galvanized steel ground rods to be installed in trench adjacent to handhole. See **DTR 56.221**.
5. Refer to **DTR 58.107** for transformer connections.
6. Refer to **DTR 54.203** for details on conduit stubs.

ORIGINAL 10/22/99	DIRECT–BURIED IN CONDUIT – INSTALLATION OF CONCRETE PAD FOR SINGLE–PHASE PAD–MOUNTED TRANSFORMERS			
APPROVED 12/21/01	NORTHEAST UTILITIES	CONSTRUCTION STANDARD	DTR 58.185	2

1/2" : 1'

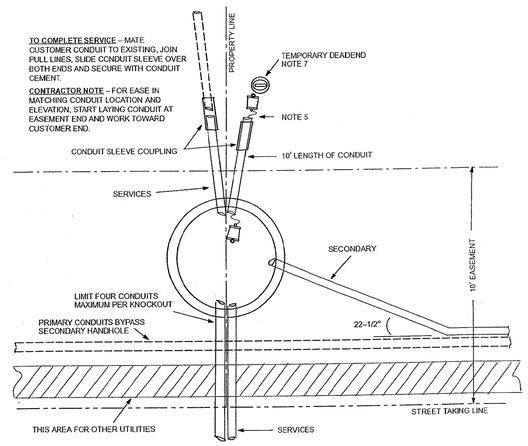

Notes

1. Install 36" D x 36" H round handhole **SPC H–020**, **SC 0174988**, and fiberglass cover **SPC C–710**, **SC 0174819**.
2. Install on virgin or well tamped gravel. Where poor soil exists, remove to 6 inches below bottom of handhole and backfill with compacted clean gravel, free of foreign matter and debris, and extending 12 inches past edge of structure.
3. Install conduit, with all joints cemented, through knockout to 4 inches inside handhole. Conduit destination to be permanently marked on conduit end. Conduit shall be minimum 3–inch–diameter, Schedule 40 PVC. Limit four 4–inch–diameter conduits per knockout.
4. Gaps around conduit at knockout openings shall be sealed with cement mortar to prevent backfill from entering handhole.
5. Install a 1/4–inch–diameter nylon pull line in each duct, including 10 feet of slack, and secure to conduit plug (e.g., **SC 0175141** for 3–inch diameter). Plugged conduit to be left accessible.
6. When installing cable, utilize pulling eyelets provided in handhole.
7. Refer to **DTR 54.118** for details on installation of temporary deadend.

ORIGINAL 10/22/99	DIRECT–BURIED IN CONDUIT – INSTALLATION OF HANDHOLE 600 VOLTS AND BELOW – SINGLE–PHASE – SECONDARY/SERVICE			
APPROVED 12/21/01	NORTHEAST UTILITIES	CONSTRUCTION STANDARD	DTR 54.203	2

1/2" : 1'

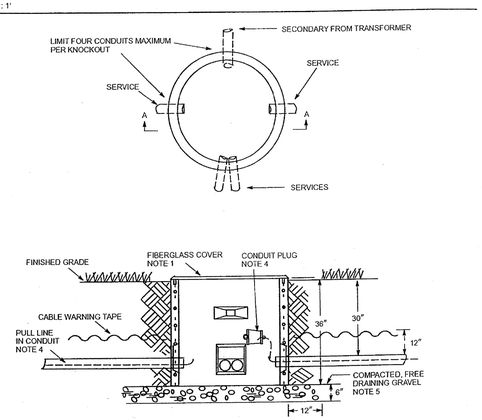

Notes

1. Install 36" D x 36" H round handhole, **SPC H–020**, and fiberglass cover, **SPC C–710**.
2. Install conduit, with all joints cemented, through knockout to 4 inches inside handhole. Terminate conduit run with end bell (e.g., **SC 0177110** for 3–inch diameter). Conduit destination to be permanently marked on conduit end. Conduit shall be minimum 3–inch–diameter, Schedule 40 PVC. Limit four 4–inch–diameter conduits per knockout.
3. Gaps around conduit at knockout openings shall be sealed with cement mortar to prevent backfill from entering handhole.
4. Install 1/4–inch–diameter nylon pull line in each duct, including 10 feet of slack, and secure to conduit plug (e.g., **SC 0175141** for 3–inch diameter). Plugged conduit to be left accessible.
5. Install on virgin or well tamped gravel. Where poor soil exists, remove to 6 inches below bottom of handhole and backfill with compacted clean gravel, free of foreign matter and debris, and extending 12 inches past edge of structure. Remaining backfill shall not contain ashes, frozen material, debris or stones larger than 2 inches in maximum dimension.
6. When installing cable, utilize pulling eyelets provided in handhole.
7. Refer to **DTR 54.203** for details on conduit stubs.

ORIGINAL 10/22/99	DIRECT–BURIED IN CONDUIT – HANDHOLE ACROSS STREET SINGLE–PHASE CABLE – SECONDARY/SERVICE			
APPROVED 12/21/01	NORTHEAST UTILITIES	CONSTRUCTION STANDARD	DTR 54.201	2

Precast Concrete Suppliers to Northeast Utilities

NU-Approved Precast Suppliers	NU Material Specification									
	SPC H-020 36" Round HH	SPC H-019 60"x56" Hex Handhole	SPC P-017 48"x48"x4" Pad - Enc	SPC P-009 42"x48"x4" Pad - XFMR	SPC P-010 Pad Plug for XFMR Pad	SPC P-013-014 76"x54"x36" Pad 75-300	SPC P-015-016 76"x70"x36" Pad 500 & >	SPC E-946 Extension-HH Hex 36"x4"	SPC E-953 Extension for HH 36"x4"	SPC C-710 42" FG Cover
Advance Materials, Inc. 11 Colton Road East Lyme, CT 06333 (860) 691-8350										X
Arrow Concrete Products, Inc. 539 Oronoque Road Milford, CT 06460 (203) 301-5091 or at 560 Salmon Brook Street Granby, CT 06035 (860) 653-5063				X		X	X			
Atlas Concrete Products, Inc. 575 Wallingford Road Durham, CT 06422 (860) 349-1751	X			X		X	X			
Connecticut Precast Corporation 555 Fan Hill Road Monroe, CT 06468 (203) 268-8688	X			X		X	X			
Cromwell Concrete Products, Inc. 667 Main Street Cromwell, CT 06416 (860) 529-3417	X		X	X	X	X				
Eastern Precast Route 133 Brookfield, CT 06805 (203) 775-9380	X			X	X					X
Jolley Precast, Inc. 463 Putnam Road Danielson, CT 06239 (860) 774-9066	X			X						
A. Rotondo & Sons, Inc. 151 Old Farms Road Avon, CT 06001 (860) 673-3291						X	X			
United Concrete Products, Inc. 173 Church Street Yalesville, CT 06492 (203) 269-3119	X		X	X		X	X	X	X	

1 EVERSOURCE STANDARD SPECIFICATIONS AND DETAILS
SCALE: N.T.S.

Stantec

STANTEC Consulting Inc.
55 Church Street
Suite 601
New Haven, CT 06510
Tel: 203.495.1645 / Fax: 203.495.1652
www.stantec.com

Copyright Reserved

The Contractor shall verify and be responsible for all dimensions. DO NOT scale the drawing - any errors or omissions shall be reported to Stantec without delay.
The Copyrights to all designs and drawings are the property of Stantec. Reproduction or use for any purpose other than that authorized by Stantec is forbidden.

Consultants

Seals

Notes

Revision	By	Appd	YYYY.MM.DD

BID DOCUMENTS Issued	PSC By	TAH Appd	2016.08.17 YYYY.MM.DD

Permit-Seal

Client/Project
Eichler's Cove Marina Parking Expansion and Improvements
Newtown, CT

Title
EVERSOURCE STANDARD ELECTRICAL DETAILS - 02

Project No. 192310611
Scale AS NOTED
Revision
Drawing No. S-11